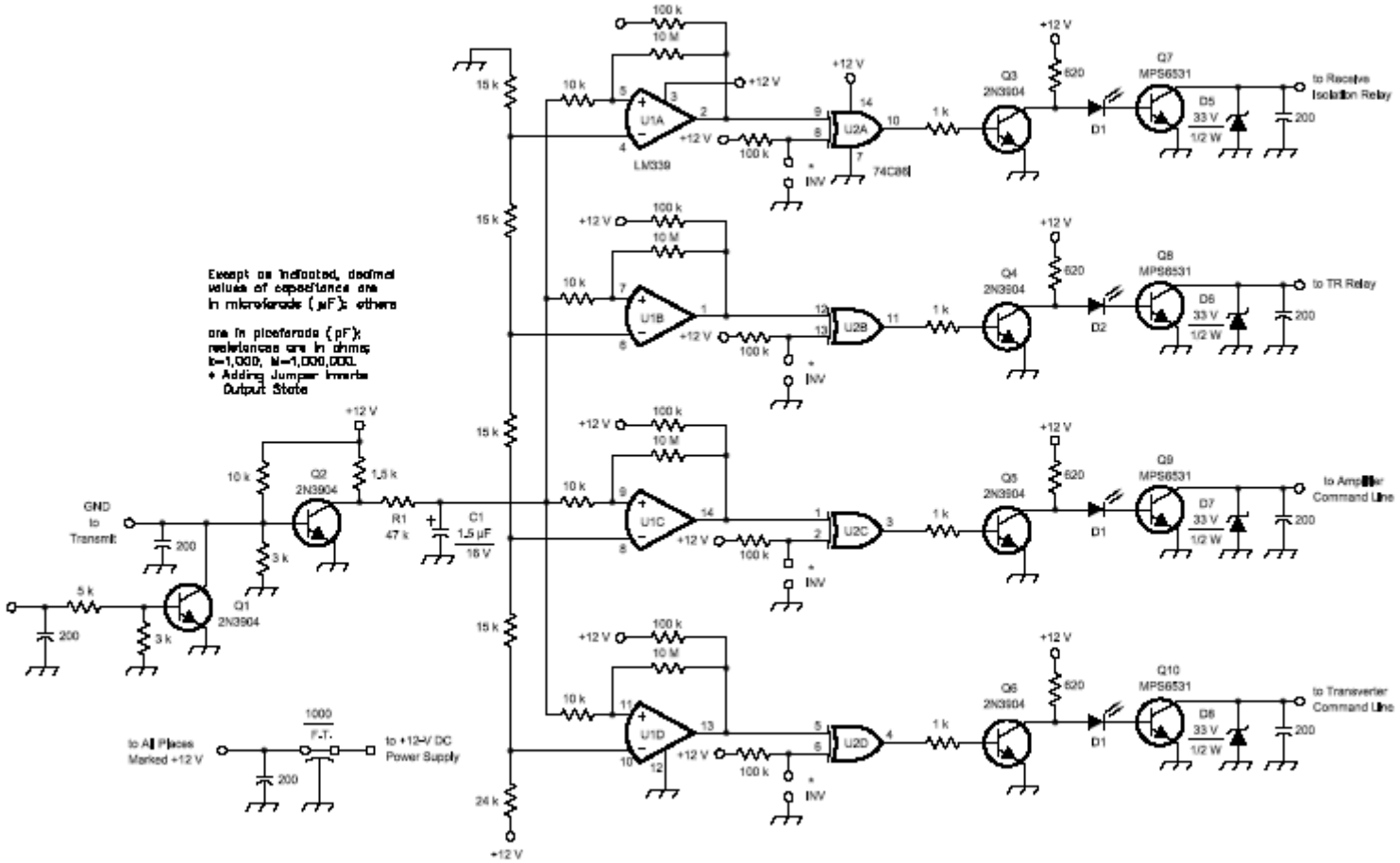
Except as indicated, decimal values of capacitance are in microfarads (µF); others are in picofarads (pF); resistances are in ohms; k=1,000, M=1,000,000.
* Adding Jumper inverts Output State
GND to Transmit
Q1 2N3904
Q2 2N3904
R1 47 k
C1 1.5 µF 16 V
U1A
U1B
U1C
U1D
LM339
U2A
U2B
U2C
U2D
74C86
Q3 2N3904
Q4 2N3904
Q5 2N3904
Q6 2N3904
Q7 MPS6531
Q8 MPS6531
Q9 MPS6531
Q10 MPS6531
D1
D2
D5 33 V 1/2 W
D6 33 V 1/2 W
D7 33 V 1/2 W
D8 33 V 1/2 W
to Receive Isolation Relay
to TR Relay
to Amplifier Command Line
to Transverter Command Line
to All Places Marked +12 V
1000 F.T.
to +12-V DC Power Supply
+12 V
INV