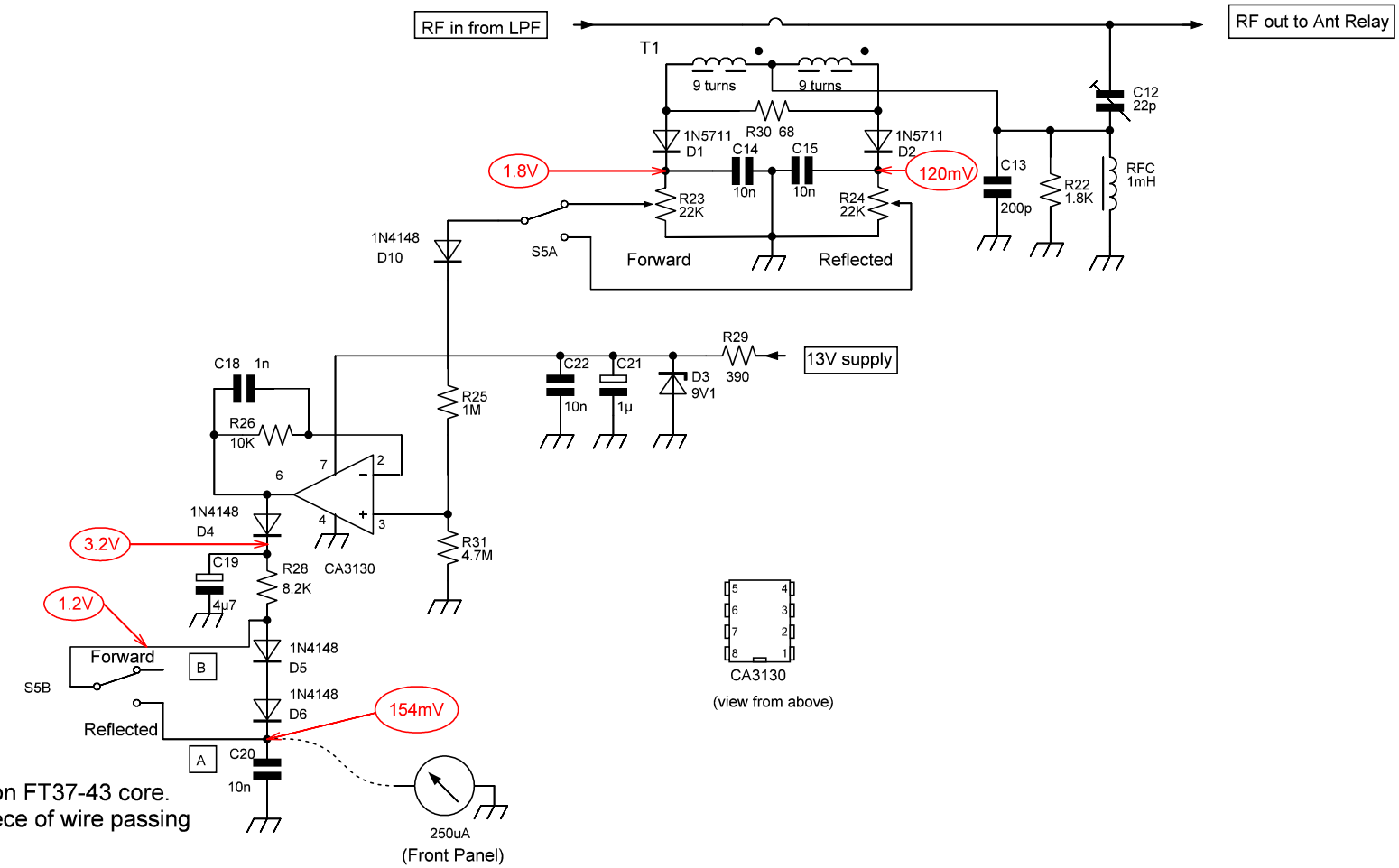

Notes

T1 bifilar wound, 9 turns on FT37-43 core.
RF in and out is single piece of wire passing through centre of core.

S5B shorts D5 and D6 when switched to reflected.

Voltages shown in red were taken with a 10 Meg Ohm input DMM when the RF output is 10 Watts and "Forward" selected.

Modifications			Date	Name	Description	Page no. 1
Date	Name				G4AON Universal Transmitter SWR Board	
						Pages 1
		D Johnson G4AON			Schematic no. TX_SWR ver 2.1	Date 06 Apr 16