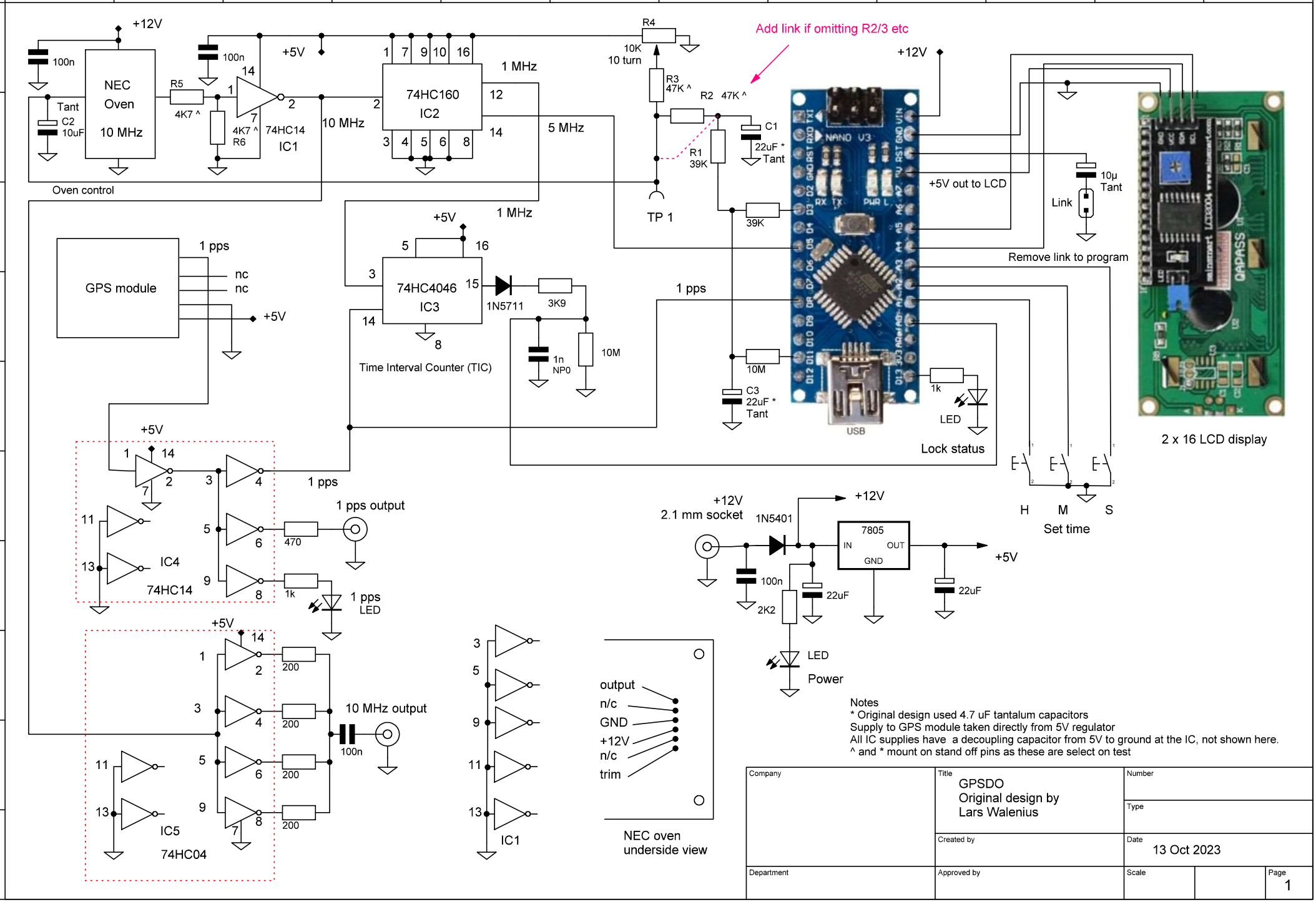

Notes
* Original design used 4.7 uF tantalum capacitors
Supply to GPS module taken directly from 5V regulator
All IC supplies have a decoupling capacitor from 5V to ground at the IC, not shown here.
^ and * mount on stand off pins as these are select on test

Company	Title GPSDO Original design by Lars Walenius	Number
		Type
	Created by	Date 13 Oct 2023
Department	Approved by	Scale / Page 1