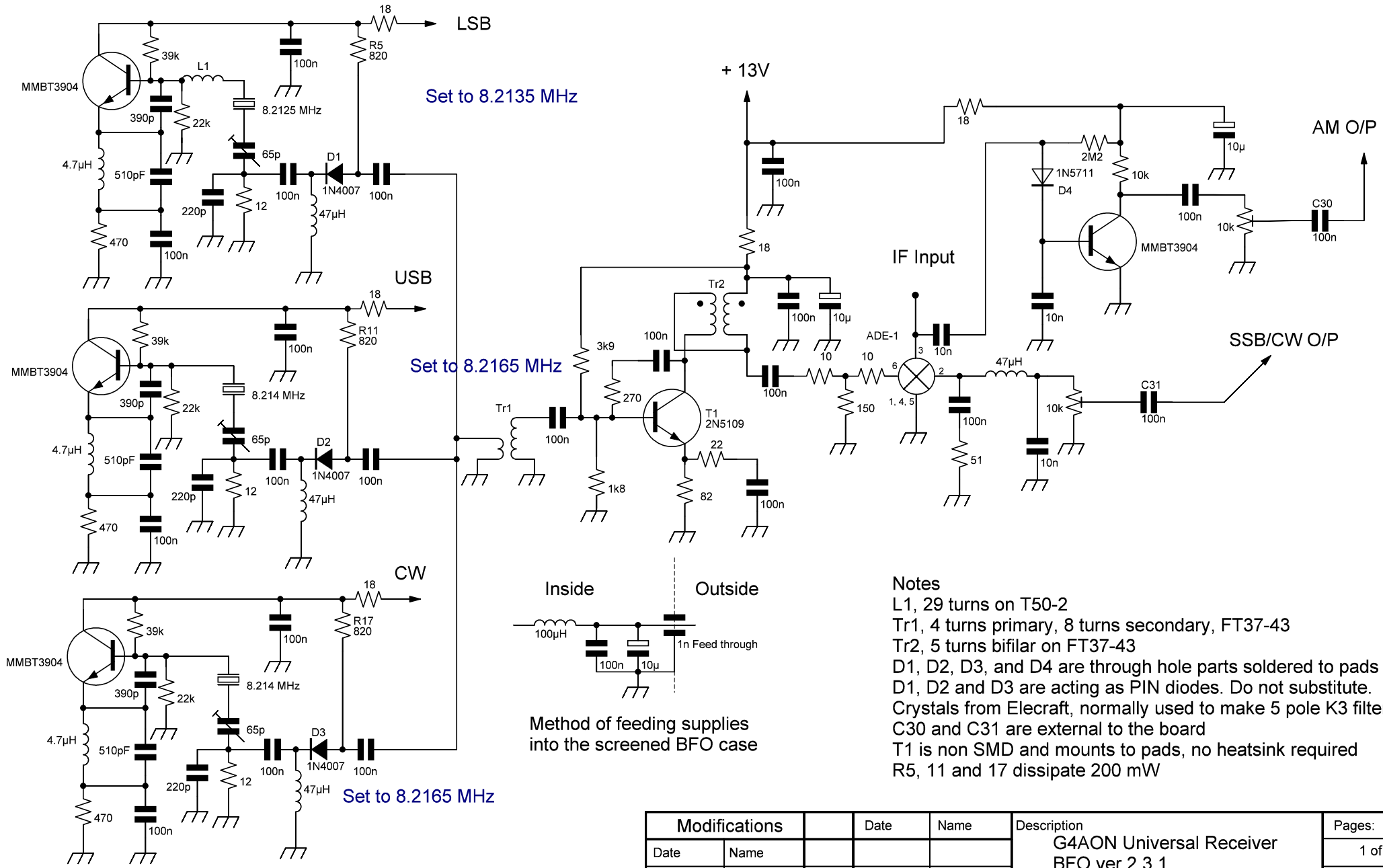

Notes
L1, 29 turns on T50-2
Tr1, 4 turns primary, 8 turns secondary, FT37-43
Tr2, 5 turns bifilar on FT37-43
D1, D2, D3, and D4 are through hole parts soldered to pads
D1, D2 and D3 are acting as PIN diodes. Do not substitute.
Crystals from Elecraft, normally used to make 5 pole K3 filters
C30 and C31 are external to the board
T1 is non SMD and mounts to pads, no heatsink required
R5, 11 and 17 dissipate 200 mW

Modifications			Date	Name	Description	Pages:
Date	Name				G4AON Universal Receiver BFO ver 2.3.1	1 of 1
						Page no:
20 Sep 16	G4AON	Drawn by D Johnson, G4AON			Schematic no:	Original Date 29-Aug-16