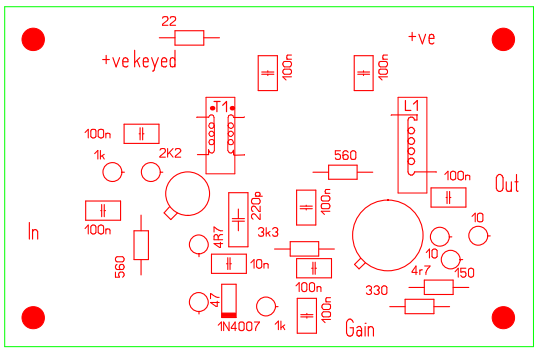
22
+ve keyed
100n
100n
+ve
T1
L1
100n
1k
2K2
560
100n
Out
100n
220p
100n
10
In
4R7
3k3
10
10n
4r7
150
560
100n
330
4r7
1N4007
1k
100n
Gain

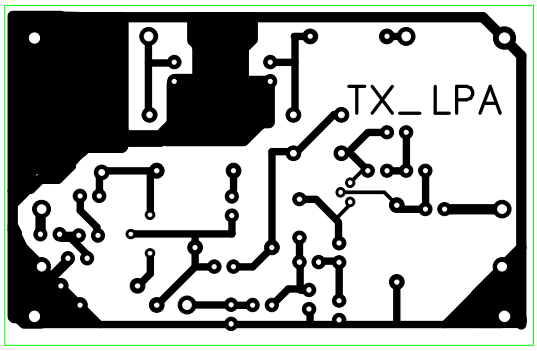
TX_ LPA