Exciter for HF Bands

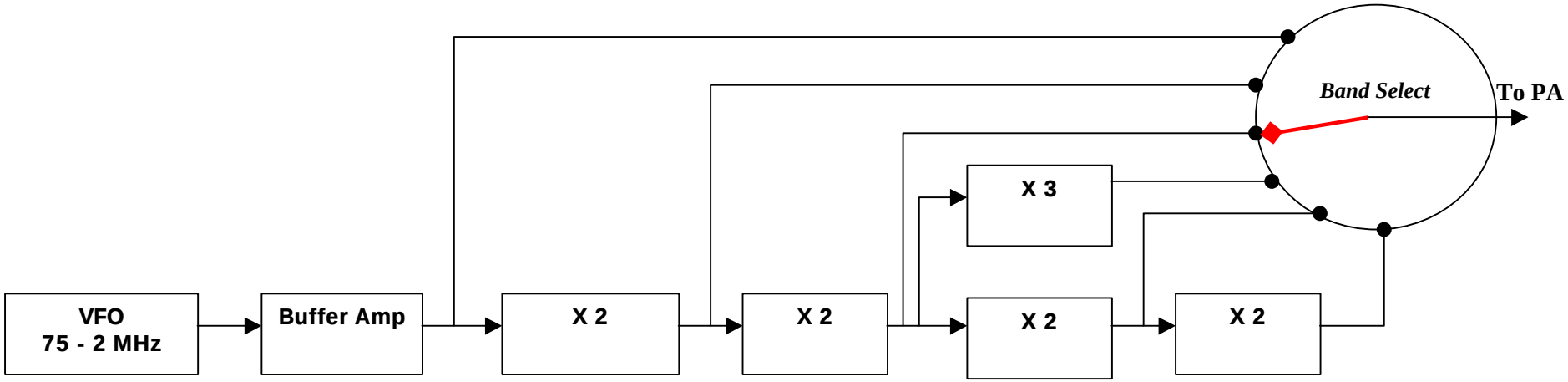

Mark Wall – EI7IS