A quarter Kilowatt PA for the 2m Band

Build in 2000/2001 by Maik, DJ2QV / M0RUN

picture
2C39BA tube

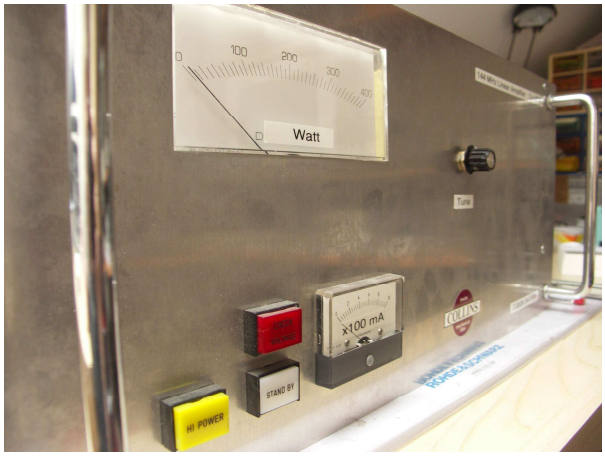

This PA is based on a design by Karl Weiner DJ9HO published in [1]. It is a grounded grid λ/2-Design using three 2C39BA tubes in parallel. The cavity is made of 1.2mm brass plates joint together using angle sections. The tubes sit in homemade sockets made of fingerstock material.
To keep the dimensions small, the resonant circuit is a 4-turn coil L2 made of 10mm wide copper strip. It is tuned by a variable capacitor C3 at the front. The RF is coupled out using an inductive coupling coil L3 which is located inside the resonant circuit and tuned with another variable capacitor C4.

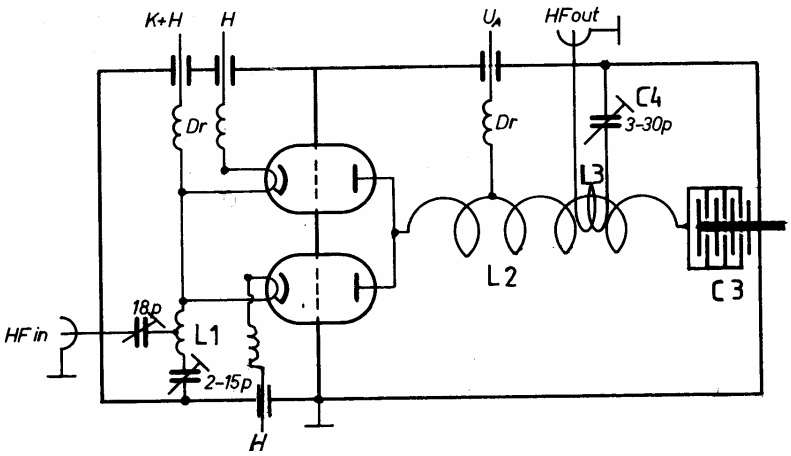

Cavity schematic (with 2 tubes only !)

The plate voltage of about 1050 V is applied to the center position of the resonant circuit through a choke and blocking capacitor. The input circuit consists of separate chokes for the filament voltage while the RF is coupled in parallel to all three tubes through an L-C-matching network. Cathode Bias voltage is generated with a simple transistor stabiliser.
For cost reasons the amplifier was built with a lot of used parts collected on various rallyes. For example the transformers, the blower, the coax relais, the panel meters and the switches are all second hand.
The plug-in cabinet is also re-used with an additional horizontal divider fitted to separate the enclosure into upper and lower part.

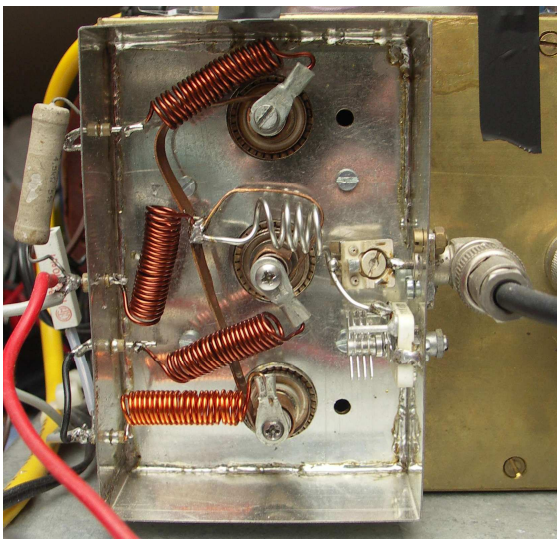

Input circuit and filament chokes

The panel meters on the front show Plate current and relative output power. The Power is derived from a simple directional coupler made of the internal coax cable between output and Coax relais.

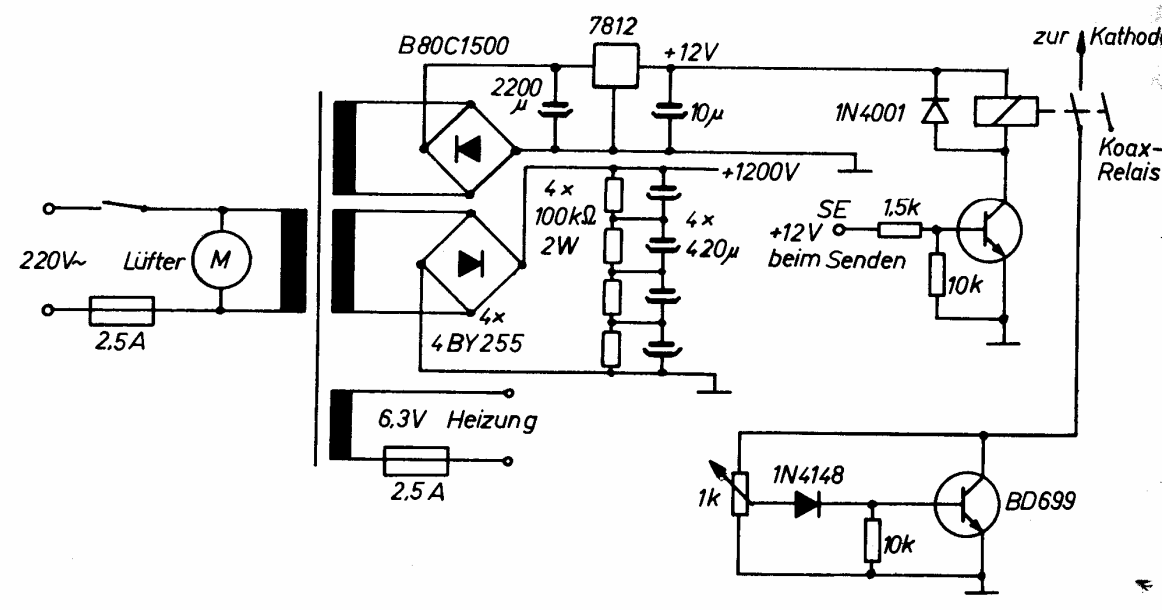

Schematic of the power supply and the Cathode Bias stabiliser

The PA has been in use for about 5 years now and neighbouring stations have always reported a clean and undistorted signal. One of the main drivers to use vacuum tubes in a 2m PA is the advantage of lower IMD3 product compared to transistors due to the higher linearity of tubes.
This PA is biased for class AB because the author operates only on SSB/CW and not on FM mode.

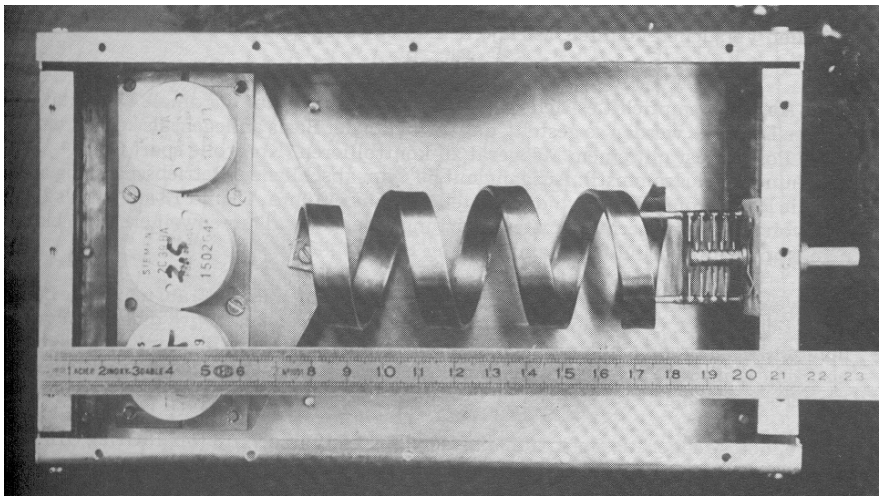

Picture of the cavity with three tubes and L2/C3

Technical Data summarised	
Frequency range	144-146 MHz
Plate voltage	1050 V dropping down to ~900V at key down
Input power	10-15W
Output Power	200 W (at 10W input)
Bias current	100mA (~ 30mA per tube)
Plate current	400mA (at 200W output)
Building time	About 1 year altogether

[1] Karl Weiner DJ9HO, UHF Unterlage Teil 4, p 627-633