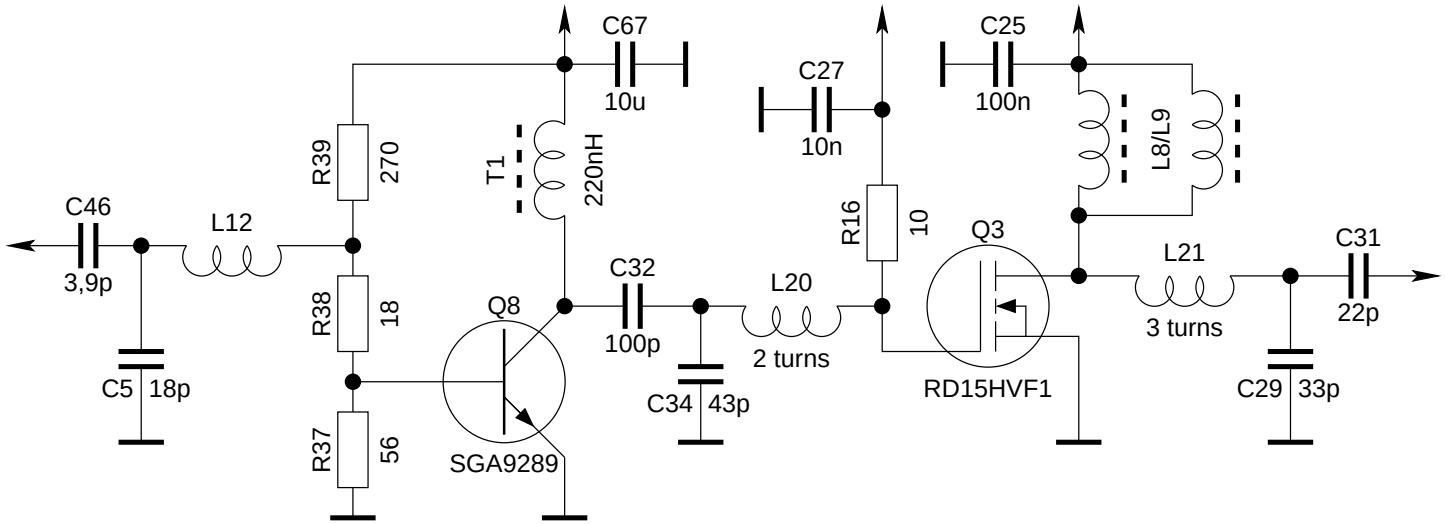
C67
10u
C27
10n
C25
100n
R39
270
T1
220nH
L8/L9
C46
3,9p
L12
R16
10
Q3
C31
22p
L21
3 turns
R38
18
Q8
C32
100p
L20
2 turns
C5
18p
C34
43p
RD15HVF1
C29
33p
R37
56
SGA9289