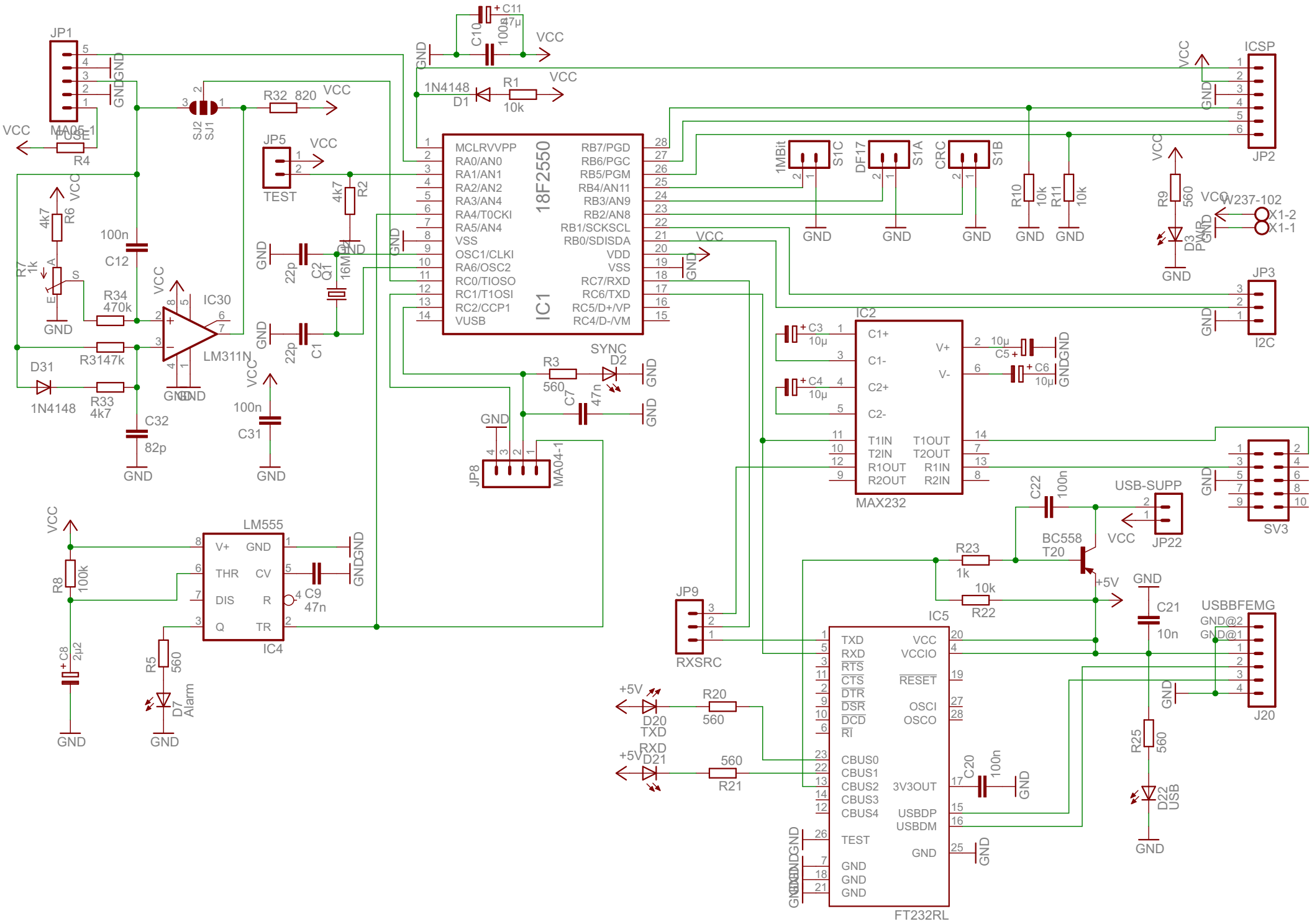
JP1
MA05-1
FUSE
R4
VCC
GND
SJ2
SJ1
R32 820
JP5
TEST
4k7
R2
R6
R7
1k
100n
C12
R34
470k
IC30
LM311N
R3147k
D31
1N4148
R33
4k7
C32
82p
C31
C10
C11
47µ
100n
1N4148
D1
R1
10k
18F2550
IC1
MCLRVVPP
RA0/AN0
RA1/AN1
RA2/AN2
RA3/AN4
RA4/T0CKI
RA5/AN4
VSS
OSC1/CLKI
RA6/OSC2
RC0/TIOSO
RC1/T1OSI
RC2/CCP1
VUSB
RB7/PGD
RB6/PGC
RB5/PGM
RB4/AN11
RB3/AN9
RB2/AN8
RB1/SCKSCL
RB0/SDISDA
VDD
VSS
RC7/RXD
RC6/TXD
RC5/D+/VP
RC4/D-/VM
22p
C2
Q1
16MHz
C1
R3
560
SYNC
D2
C7
47n
JP8
MA04-1
ICSP
JP2
1MBit
S1C
DF17
S1A
CRC
S1B
R10
10k
R11
10k
R9
560
D3
PWR
W237-102
X1-2
X1-1
JP3
I2C
IC2
MAX232
C1+
C1-
C2+
C2-
V+
V-
T1IN
T2IN
R1OUT
R2OUT
T1OUT
T2OUT
R1IN
R2IN
C3
10µ
C4
10µ
C5
10µ
C6
10µ
SV3
USB-SUPP
JP22
C22
100n
BC558
T20
R23
1k
R22
10k
+5V
C21
10n
USBBFEMG
J20
GND@2
GND@1
R25
560
D22
USB
JP9
RXSRC
IC5
FT232RL
TXD
RXD
RTS
CTS
DTR
DSR
DCD
RI
CBUS0
CBUS1
CBUS2
CBUS3
CBUS4
TEST
VCC
VCCIO
RESET
OSCI
OSCO
3V3OUT
USBDP
USBDM
GND
C20
100n
D20
TXD
R20
560
D21
RXD
R21
560
LM555
IC4
V+
GND
THR
CV
DIS
R
Q
TR
C9
47n
R8
100k
C8
2µ2
R5
560
D7
Alarm