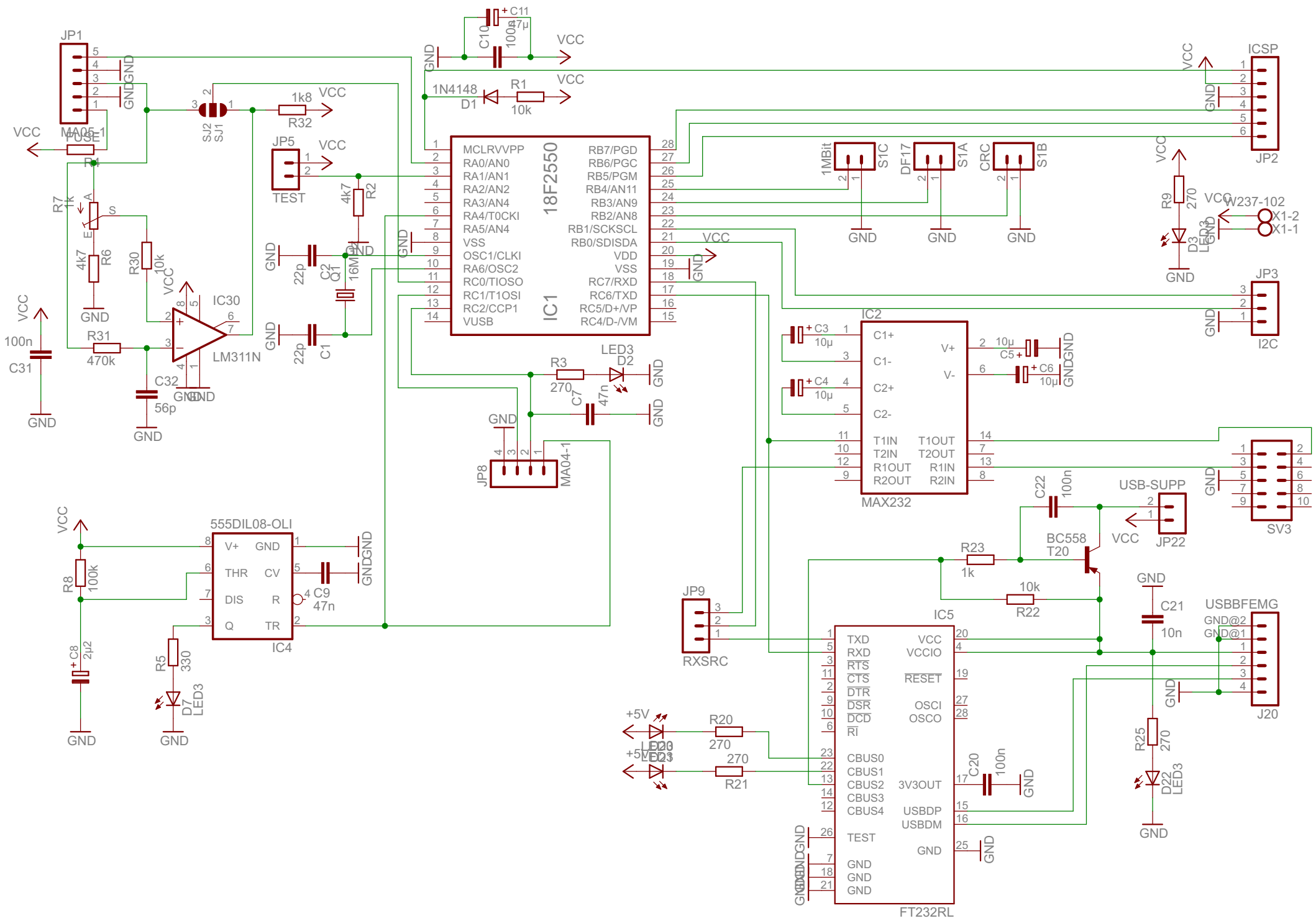
JP1
MA05-1
VCC
GND
FUSE1
R4
SJ2
SJ1
1k8
R32
JP5
TEST
4k7
R2
R7
1k
4k7
R6
R30
10k
IC30
LM311N
R31
470k
C31
100n
C32
56p
22p
C2
Q1
16M
C1
C10
100n
C11
47µ
1N4148
D1
R1
10k
IC1
18F2550
MCLRVVPP
RA0/AN0
RA1/AN1
RA2/AN2
RA3/AN4
RA4/T0CKI
RA5/AN4
VSS
OSC1/CLKI
RA6/OSC2
RC0/TIOSO
RC1/T1OSI
RC2/CCP1
VUSB
RB7/PGD
RB6/PGC
RB5/PGM
RB4/AN11
RB3/AN9
RB2/AN8
RB1/SCKSCL
RB0/SDISDA
VDD
VSS
RC7/RXD
RC6/TXD
RC5/D+/VP
RC4/D-/VM
R3
270
LED3
D2
C7
47n
JP8
MA04-1
555DIL08-OLI
IC4
V+
GND
THR
CV
DIS
R
Q
TR
R8
100k
C8
2µ2
R5
330
D7
LED3
C9
47n
JP9
RXSRC
+5V
R20
270
R21
270
1MBit
S1C
DF17
S1A
CRC
S1B
ICSP
JP2
R9
270
D3
LED3
W237-102
X1-2
X1-1
JP3
I2C
IC2
MAX232
C1+
C1-
C2+
C2-
V+
V-
T1IN
T2IN
R1OUT
R2OUT
T1OUT
T2OUT
R1IN
R2IN
C3
10µ
C4
10µ
C5
10µ
C6
10µ
SV3
USB-SUPP
JP22
C22
100n
BC558
T20
R23
1k
R22
10k
IC5
FT232RL
TXD
RXD
RTS
CTS
DTR
DSR
DCD
RI
CBUS0
CBUS1
CBUS2
CBUS3
CBUS4
TEST
VCC
VCCIO
RESET
OSCI
OSCO
3V3OUT
USBDP
USBDM
GND
C20
100n
C21
10n
R25
270
D22
LED3
USBBFEMG
GND@2
GND@1
J20