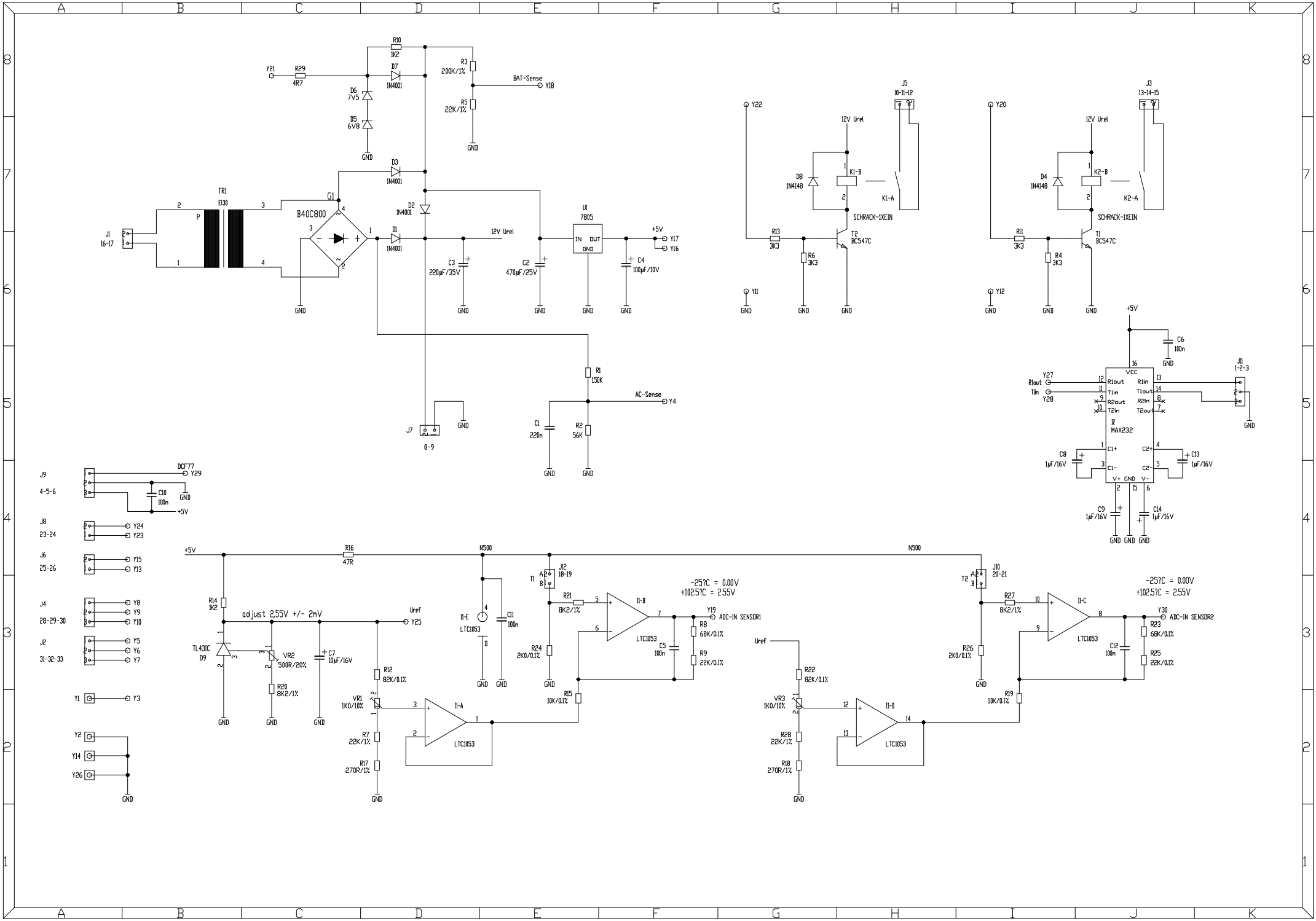
R10 1K2
R3 200K/1%
BAT-Sense
Y18
Y21
R29 4R7
D7 1N4001
D6 7V5
D5 6V8
R5 22K/1%
GND
D3 1N4001
TR1
E130
G1
B40C800
D2 1N4001
J1 16-17
D1 1N4001
12V Urel
U1 7805
IN OUT GND
+5V
Y17
Y16
C3 220µF/35V
C2 470µF/25V
C4 100µF/10V
R1 150K
AC-Sense
Y4
J7 8-9
C1 220n
R2 56K
Y22
J5 10-11-12
12V Urel
D8 1N4148
K1-B
K1-A
SCHRACK-1XEIN
R13 3K3
T2 BC547C
R6 3K3
Y11
Y20
J3 13-14-15
D4 1N4148
K2-B
K2-A
R11 3K3
T1 BC547C
R4 3K3
Y12
C6 100n
VCC
Y27
R1out
T1in
Y28
R1in
T1out
R2in
T2out
R2out
T2in
I2 MAX232
C1+
C1-
C2+
C2-
V+ GND V-
C8 1µF/16V
C13 1µF/16V
C9 1µF/16V
C14 1µF/16V
J1 1-2-3
J9 4-5-6
DCF77
Y29
C10 100n
J8 23-24
Y24
Y23
J6 25-26
Y15
Y13
J4 28-29-30
Y8
Y9
Y10
J2 31-32-33
Y5
Y6
Y7
Y1
Y3
Y2
Y14
Y26
R16 47R
N500
R14 1K2
adjust 2,55V +/- 2mV
Uref
Y25
TL431C D9
VR2 500R/20%
C7 10µF/16V
R20 8K2/1%
R12 82K/0.1%
VR1 1K0/10%
R7 22K/1%
R17 270R/1%
II-A
LTC1053
II-E
C11 100n
J12 18-19
R21 8K2/1%
R24 2K0/0.1%
R15 10K/0.1%
II-B
C5 100n
R8 68K/0.1%
R9 22K/0.1%
Y19
ADC-IN SENSOR1
-25?C = 0.00V
+102.5?C = 2.55V
J10 20-21
R27 8K2/1%
R26 2K0/0.1%
R19 10K/0.1%
II-C
C12 100n
R23 68K/0.1%
R25 22K/0.1%
Y30
ADC-IN SENSOR2
R22 82K/0.1%
VR3 1K0/10%
R28 22K/1%
R18 270R/1%
II-D