2N2/40+, A 40 Meter CW Transceiver

Designed by: Jim Kortge, K8IQY

Rx/Tx Driver
(J176 Rx Mute)

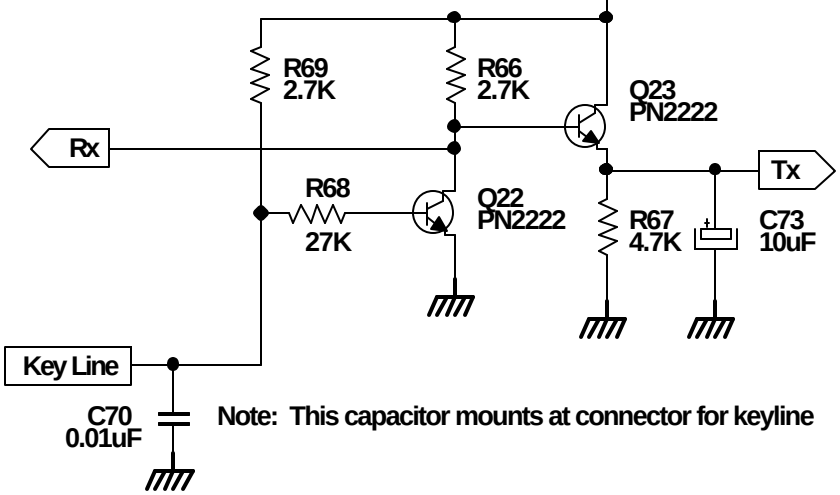

Note: This capacitor mounts at connector for keyline

Rx T/R Switch

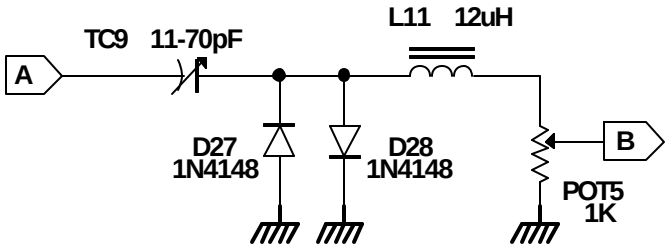

TC9 can be 47pF, L11 10uH, for fixed tuned input

Input Power

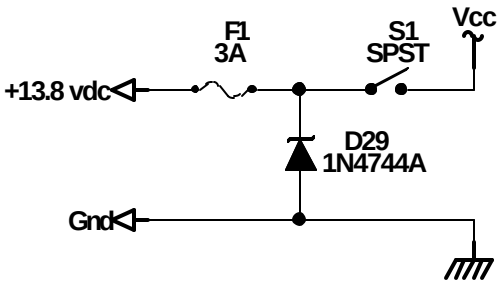

Note: S1 part of POT3

Adjustable Span RIT

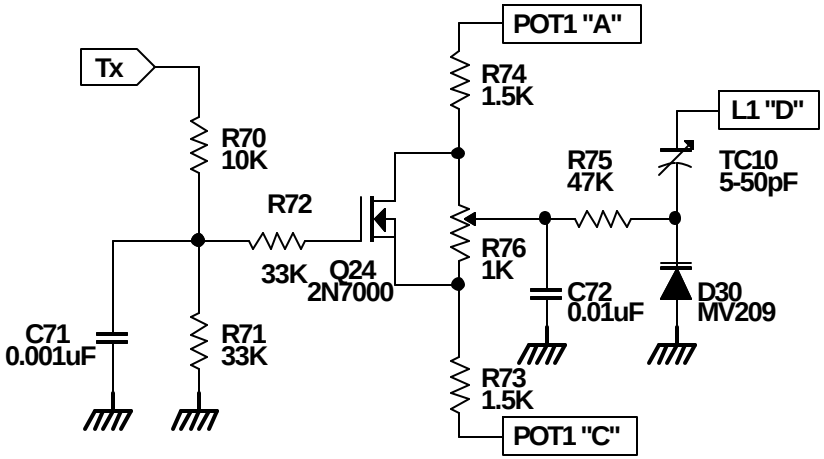

Note: TC10 can be fixed 47pF for fixed RIT span

2N240+DA.SCH; 02012002