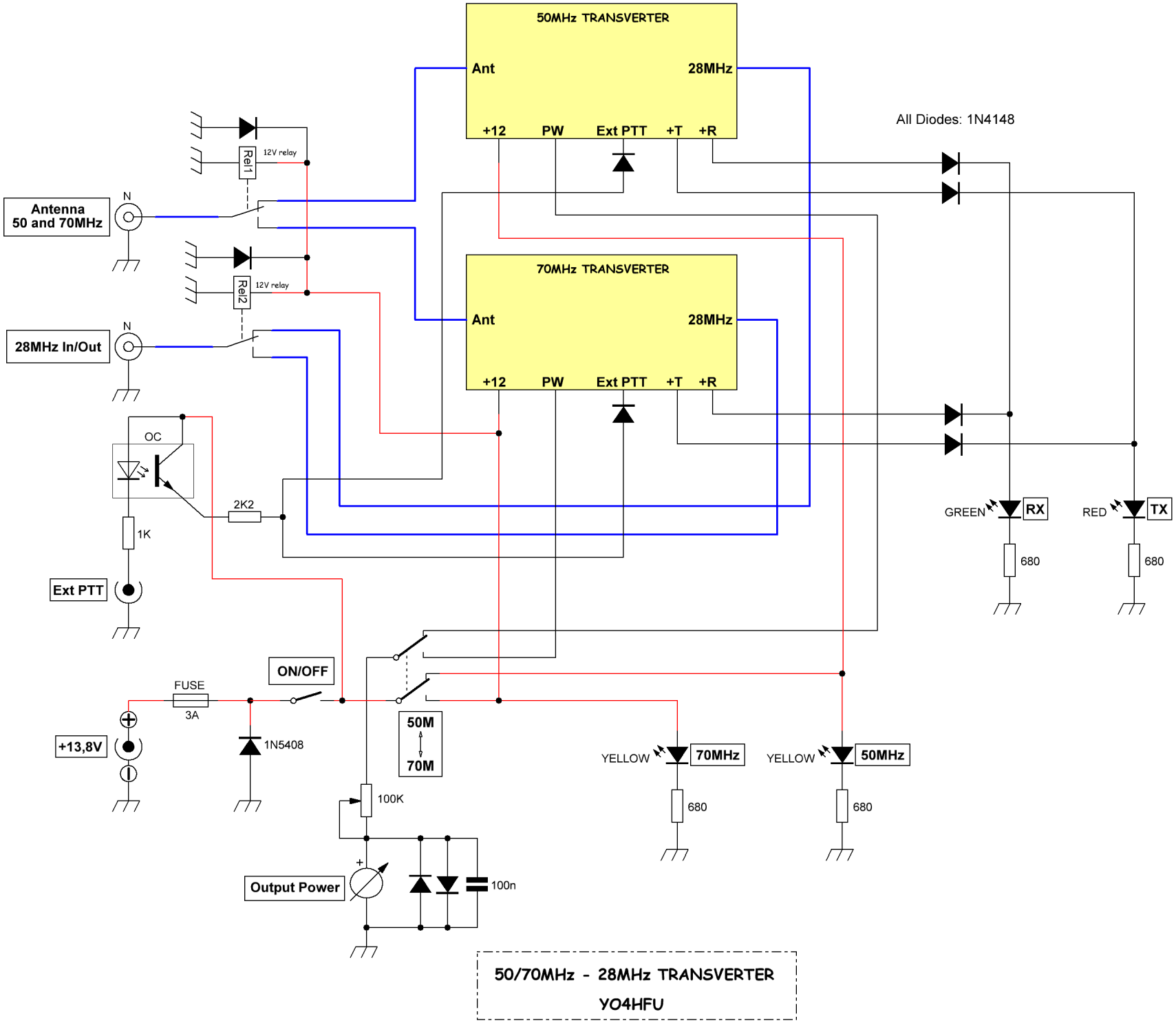
50MHz TRANSVERTER
Ant
28MHz
+12
PW
Ext PTT
+T
+R
70MHz TRANSVERTER
Ant
28MHz
+12
PW
Ext PTT
+T
+R
All Diodes: 1N4148
Rel1
12V relay
Rel2
12V relay
Antenna
50 and 70MHz
N
28MHz In/Out
N
OC
2K2
1K
Ext PTT
GREEN
RX
RED
TX
680
680
ON/OFF
FUSE
3A
+13,8V
1N5408
50M
70M
YELLOW
70MHz
YELLOW
50MHz
680
680
100K
Output Power
100n
50/70MHz - 28MHz TRANSVERTER
YO4HFU