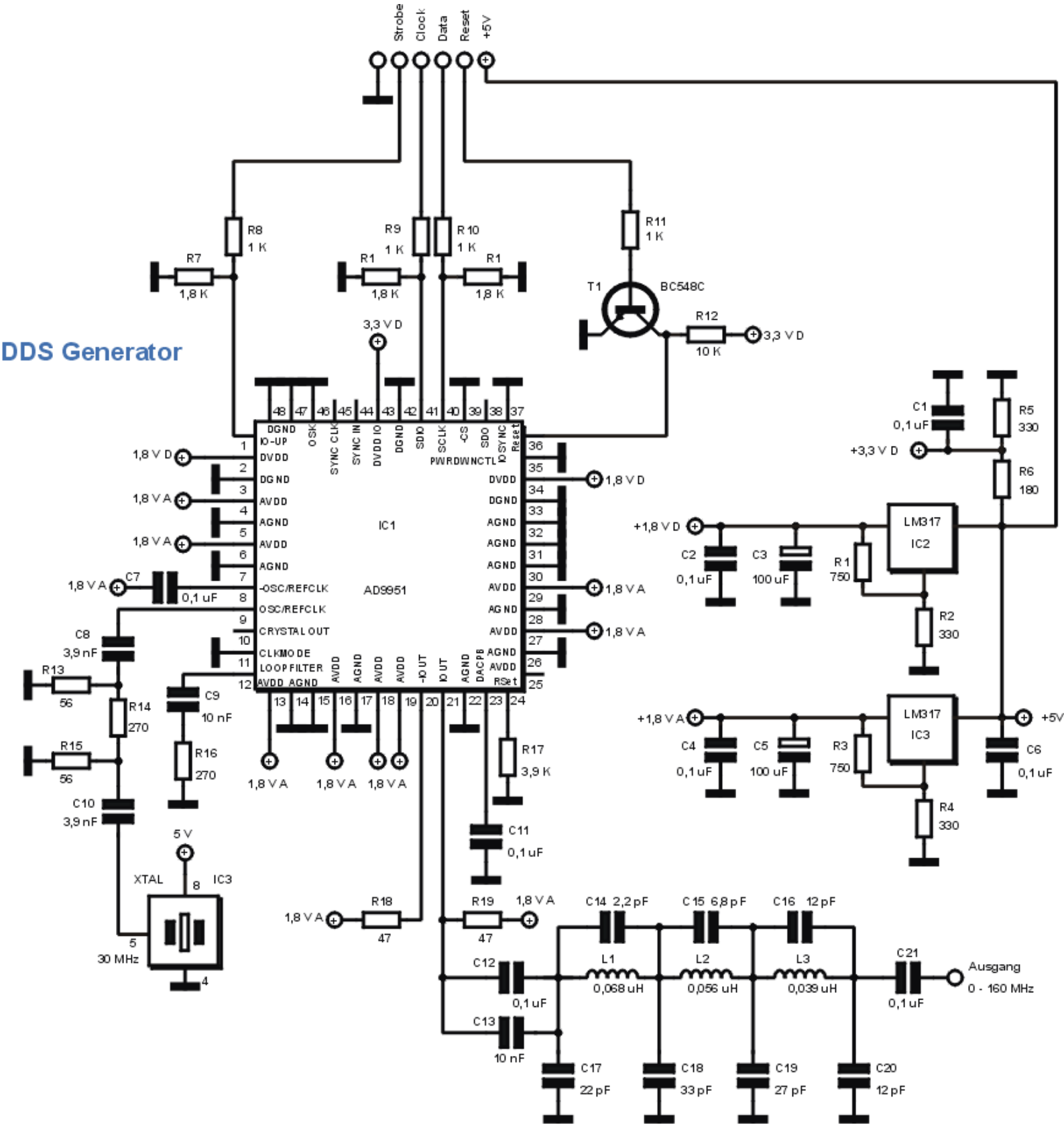DDS Generator