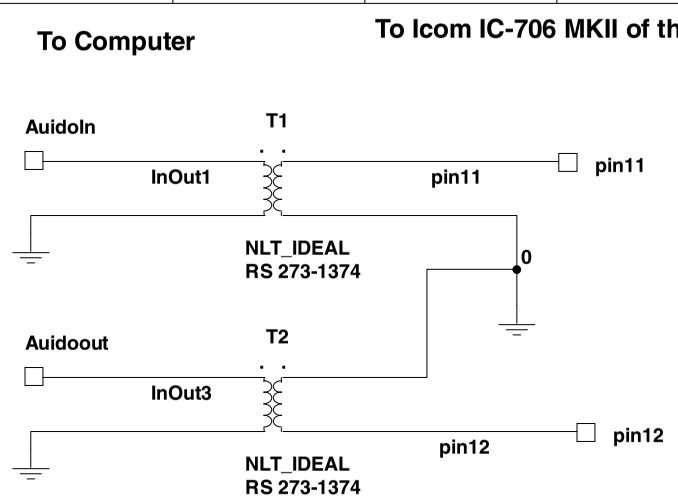


## PTT- Interface Using a Com-port (serial)

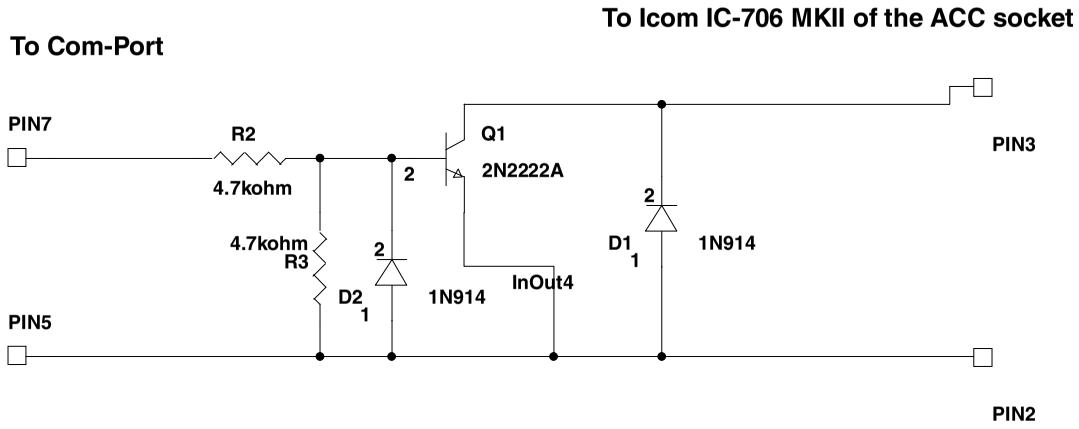


| | | | |
|---|---|---|---|
| Title: **Circuit1** | | | |
| **Ic0m IC-706MKII** | | | |
| Designed by: **NT8N** | Document No: **0001** | Revision: **1.0** | |
| Checked by: | Date: | Size: **A** | |
| Approved by: | Sheet **1** of **1** | | |