Cable Reflection Tester

From Electronics Now, December 1996

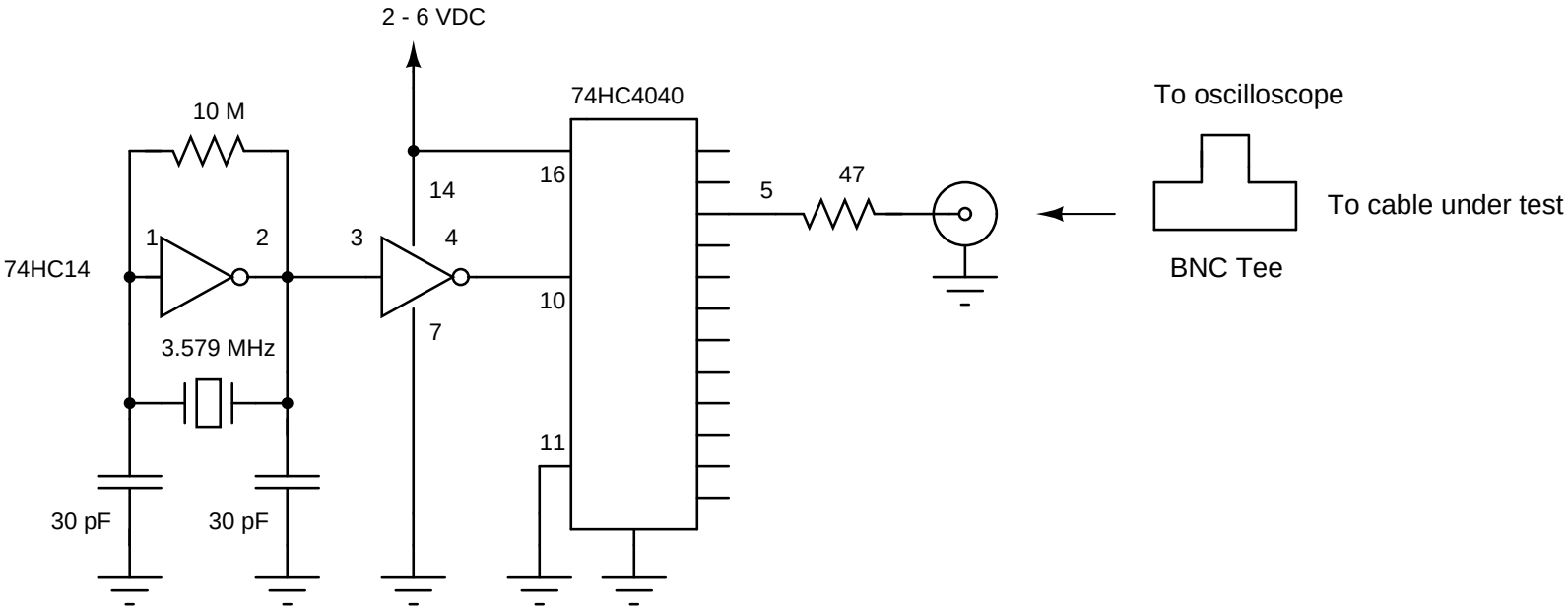

Waveforms

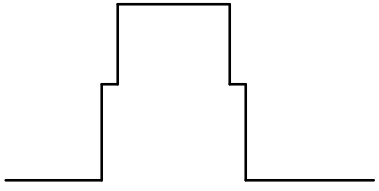

Normal cable

plateau halfway up the signal
is the effect of the signal bouncing
back from the end of the cable

Shorted cable

Equations

D = Distance to the point you want to measure in feet

T = Oscilliscope pulse width time in microseconds

Vf = Velocity factor of the cable

983 = Number of feet light travels in one microsecond

$$D = T/2 \times Vf \times 983$$

Refer to the December 1996 issue of Electronics Now
for more information