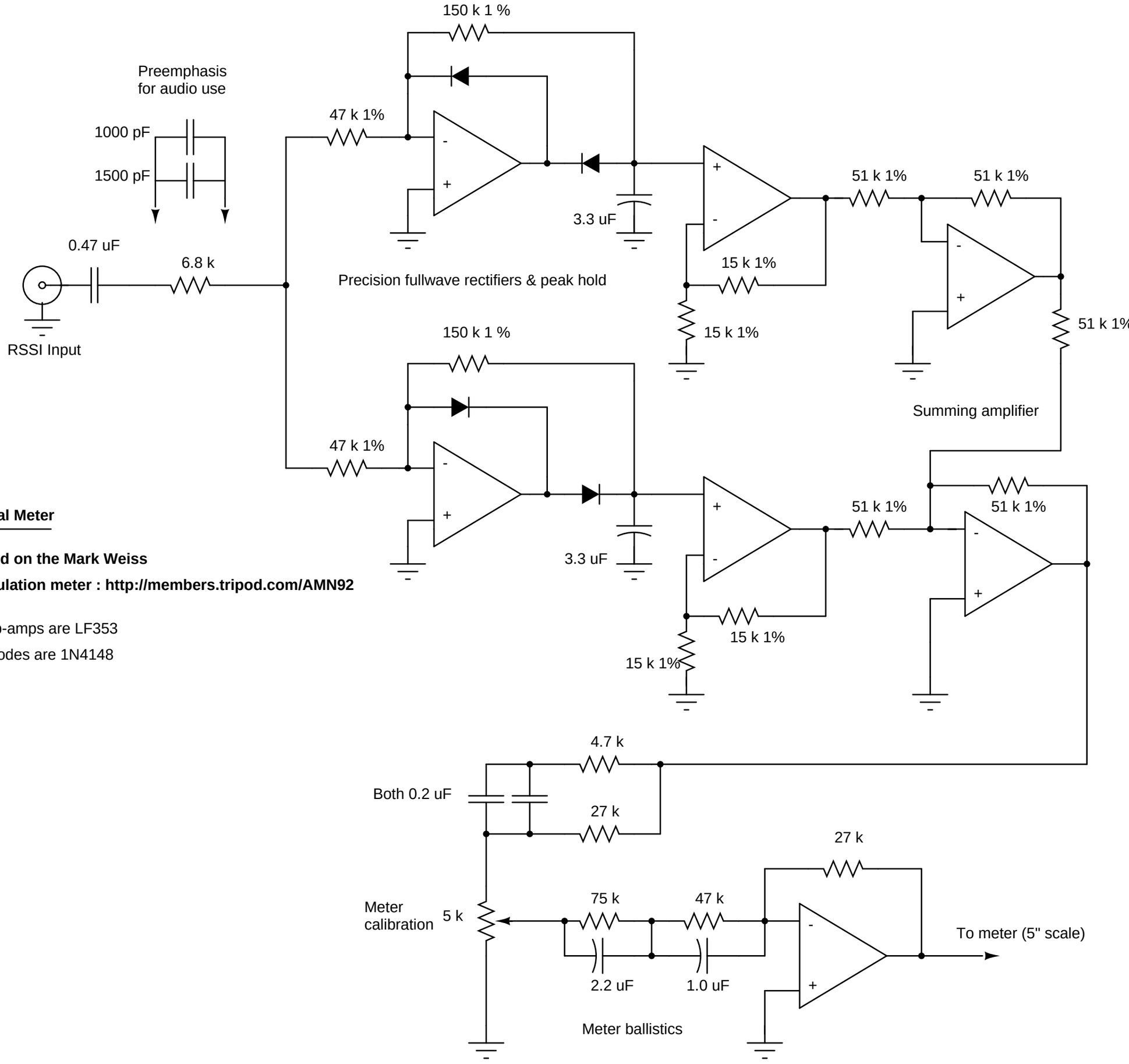

Signal Meter

Based on the Mark Weiss

modulation meter : http://members.tripod.com/AMN92

All op-amps are LF353

All diodes are 1N4148