Return Loss Bridge (Reflection Coefficient Bridge)

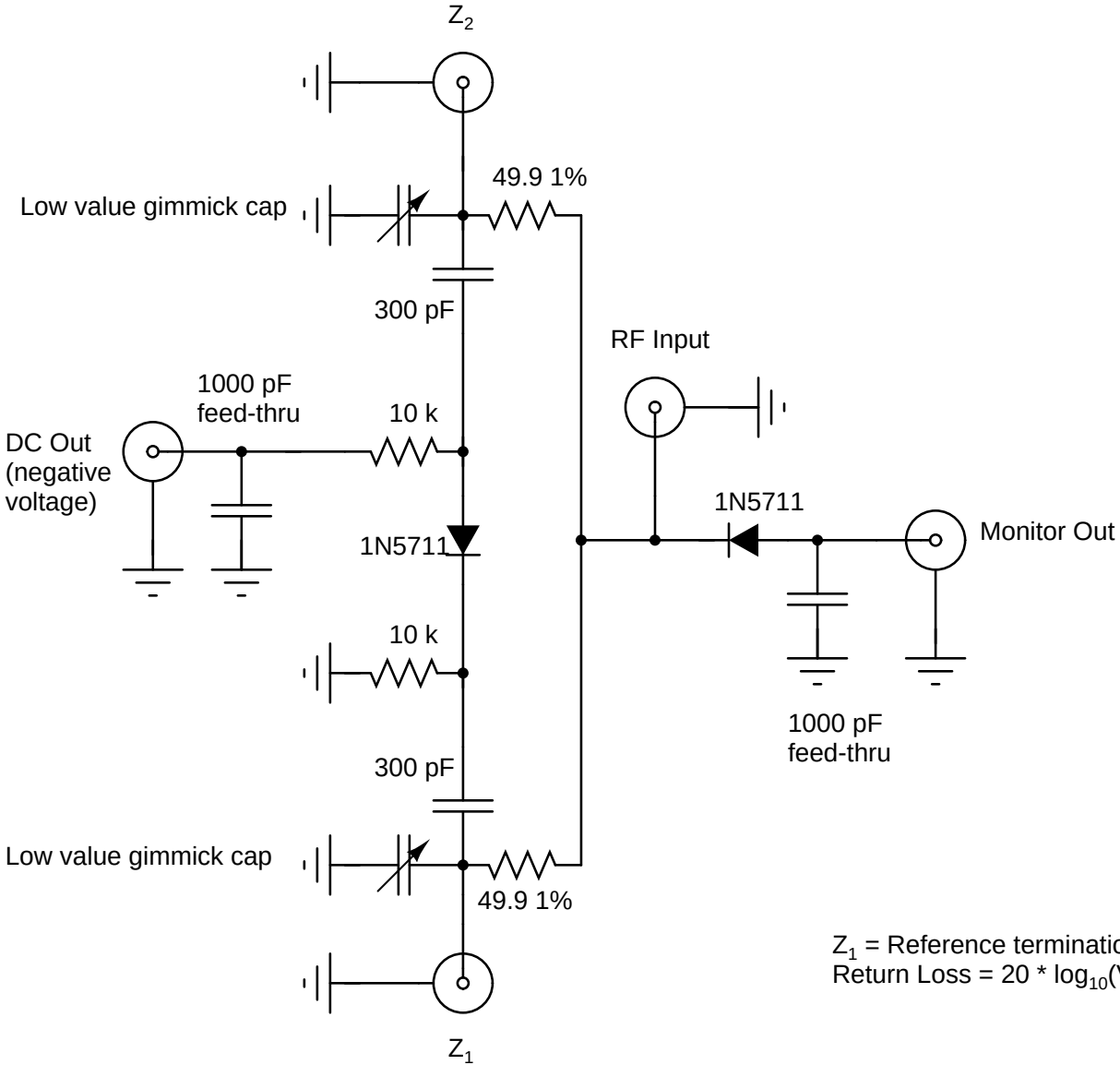

Z_1 = Reference termination

Return Loss = $20 * \log_{10}(V_{reflected} / V_{reference})$