Divide By 64, 3.5 GHz Prescaler

Using parts from an old California Amplifier
MMDS downconverter

www.gbppr.org

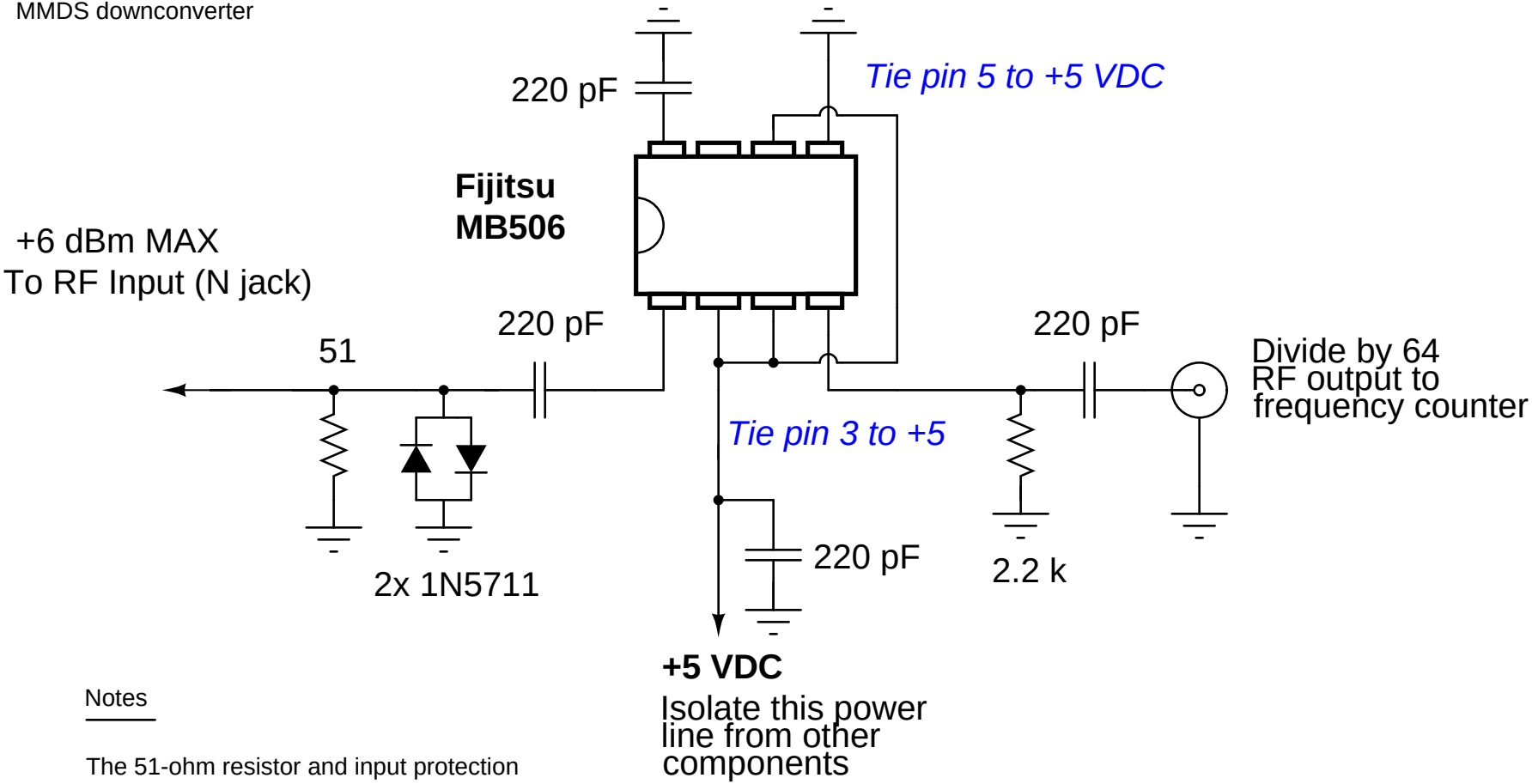

Notes

The 51-ohm resistor and input protection diodes are not necessary, but recommended