Frequency Converter
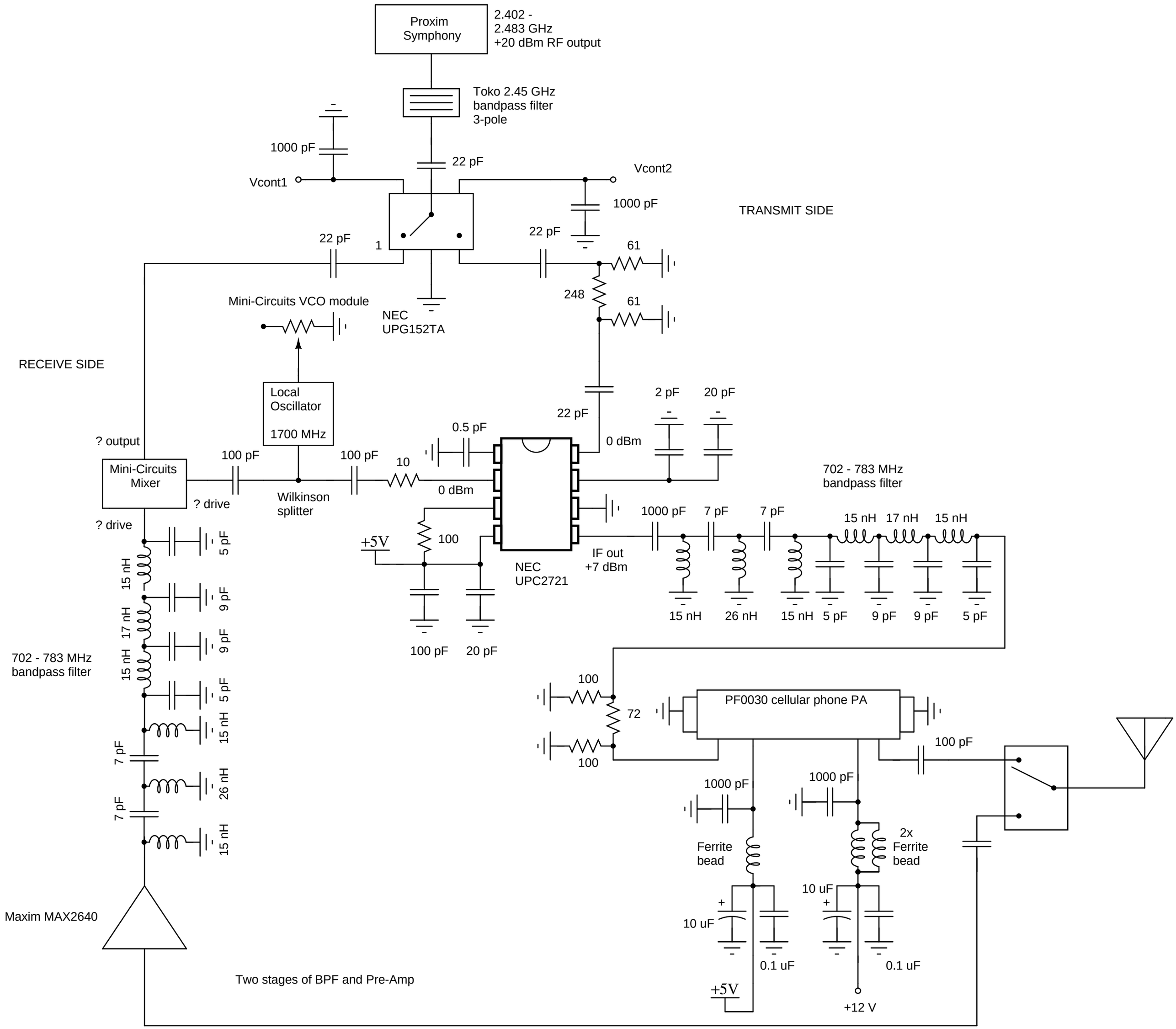
www.gbppr.org