Directional Coupler Overview

RF Power / SWR Meter Application

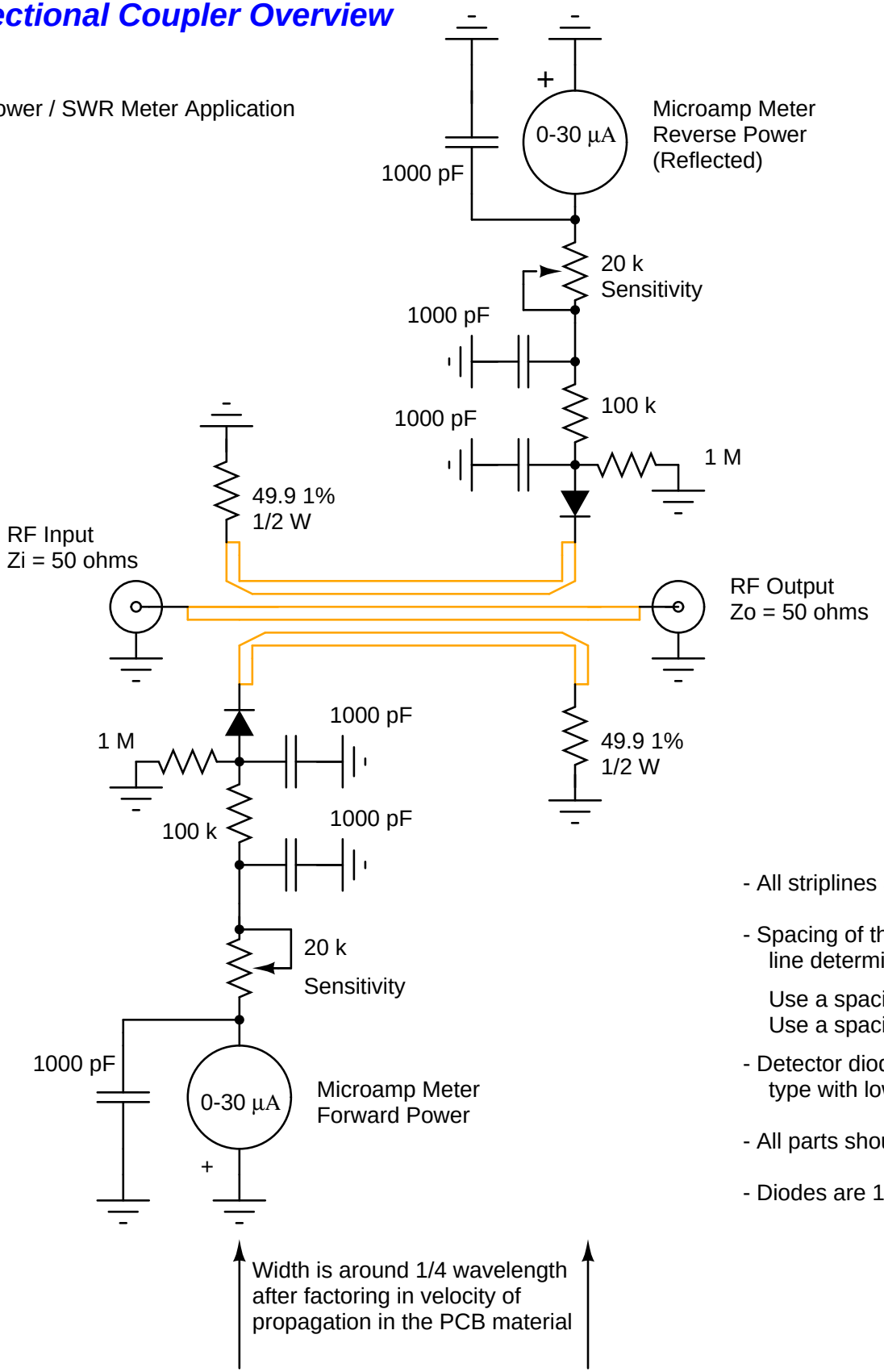

- All striplines are 50-ohms impedance
- Spacing of the pickup lines from the center line determines the coupling factor.

  Use a spacing of ~1 mm for 1-30 Watts
  Use a spacing of 2 mm for 10-300 Watts
- Detector diode should be a Schottky barrier type with low internal capacitance.
- All parts should be SMT style
- Diodes are 1N5711 or equiv.

Width is around 1/4 wavelength after factoring in velocity of propagation in the PCB material