Bias Tee

www.gbppr.org

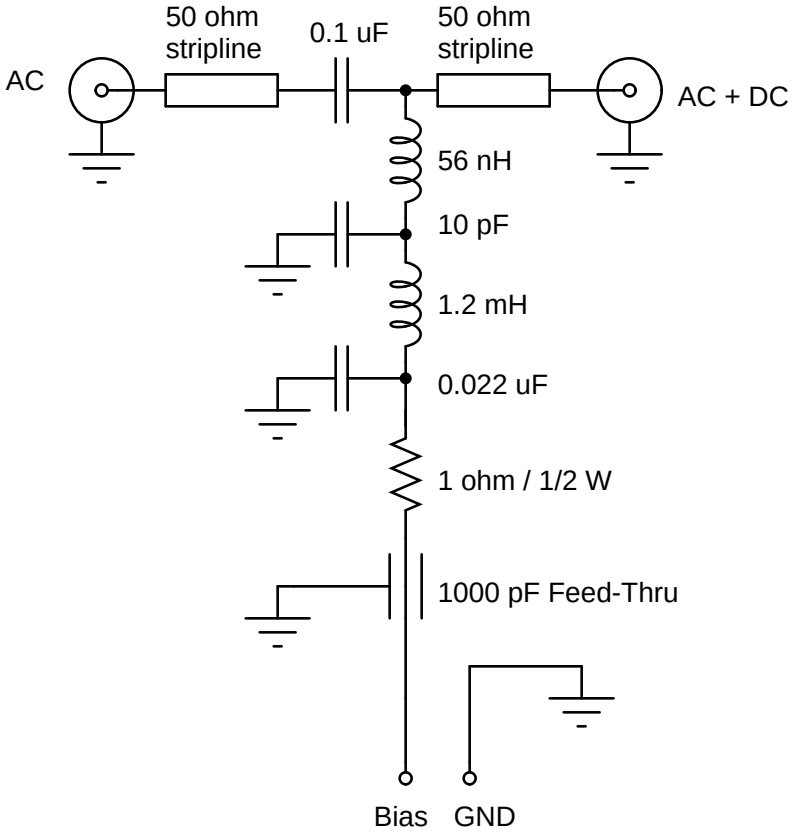

Inductors and capacitors should be selected for their current/voltage