Antenna Analyzer 88 - 960 MHz
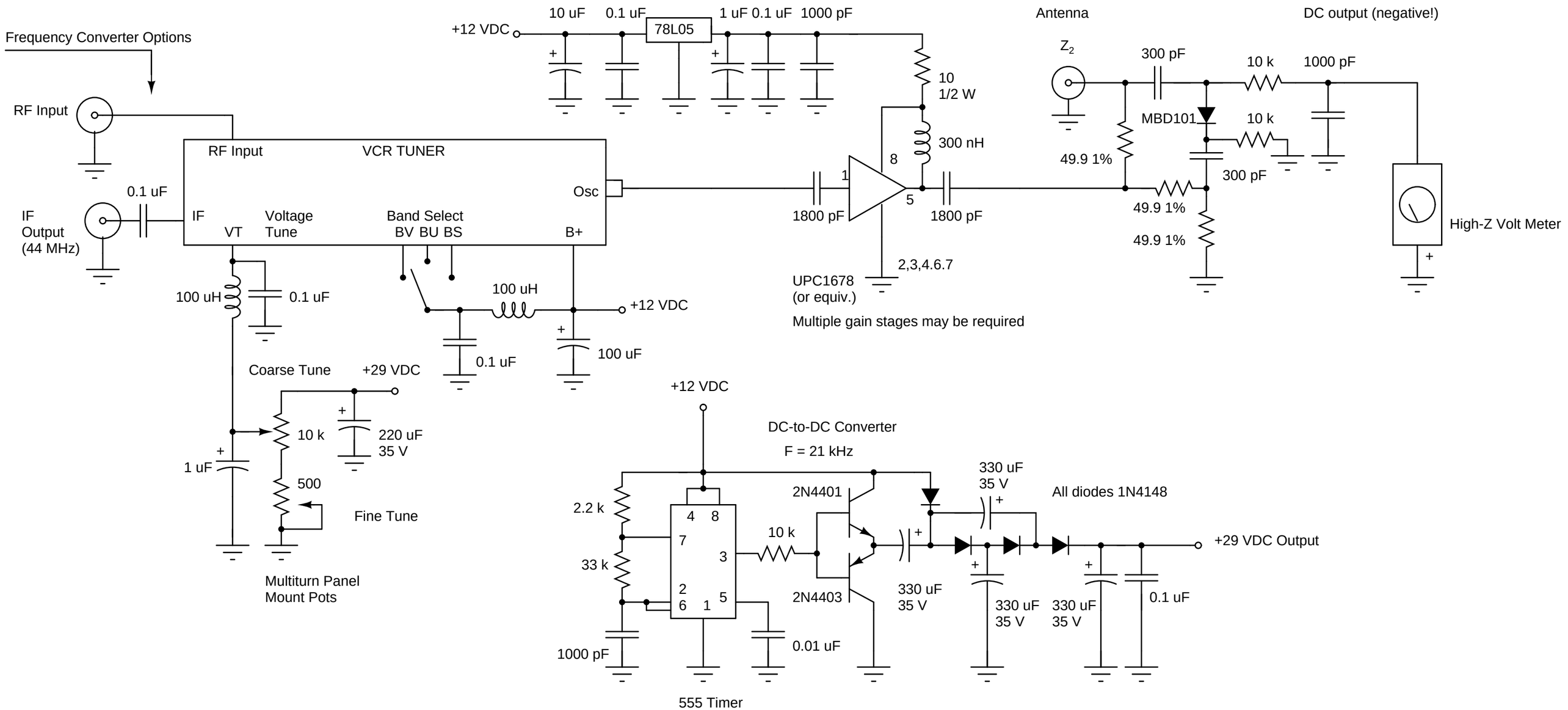
GBPPR www.gbppr.org