LED RF Signal Meter

www.gbppr.org

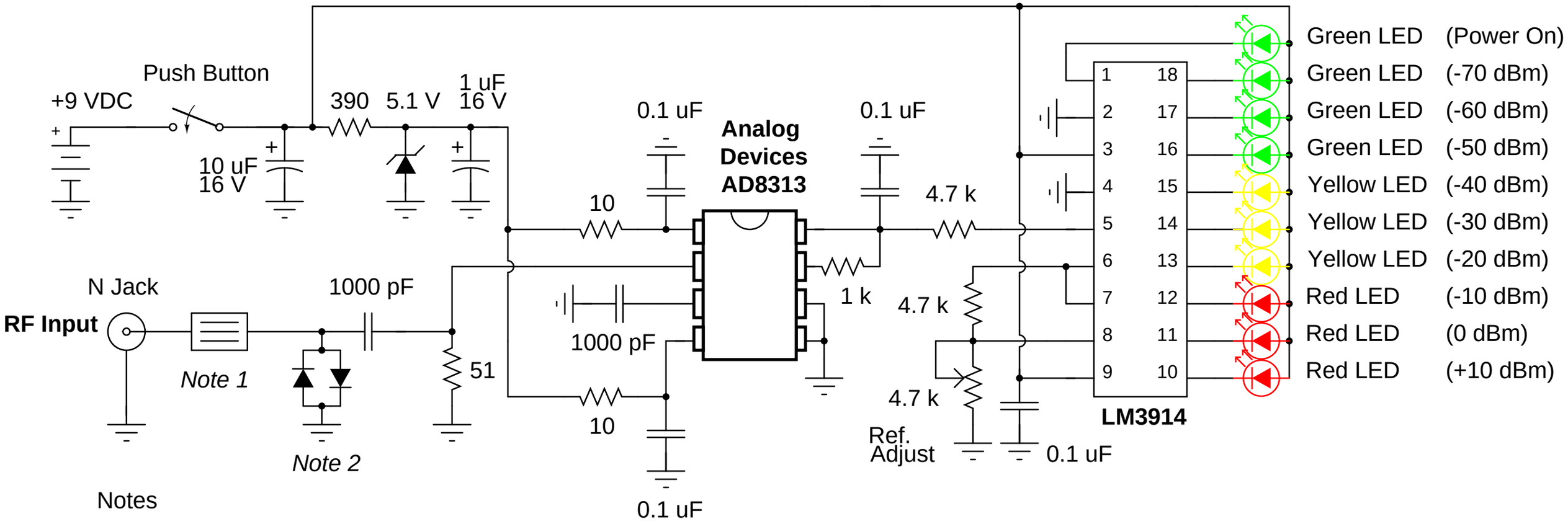

Notes

All parts should be SMT
5.1 volt zener is 1N5231
Get the AD8313 from Analog Devices, www.analog.com
Refer to AD8313 reference design schematic for more information

Note 1 Optional bandpass filter for your desired band to measure
Note 2 Optional RF input protection, two 1N5711 diodes