20 dB / 150 Watt Attenuator

www.gbppr.org

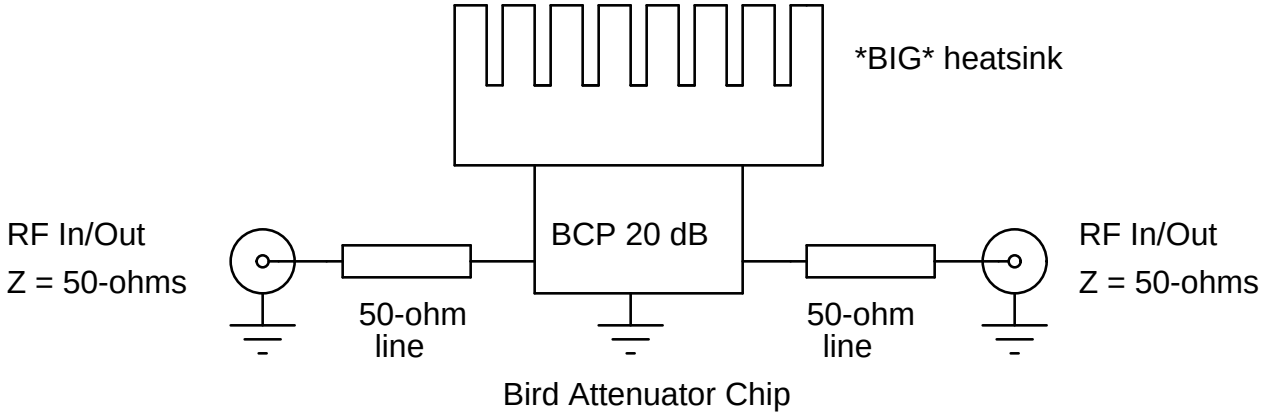

Bird BCP attenuator chips are available from:
Radio Dan, http://radiodan.com/Henry/parts/parts.htm
for $30 a piece.