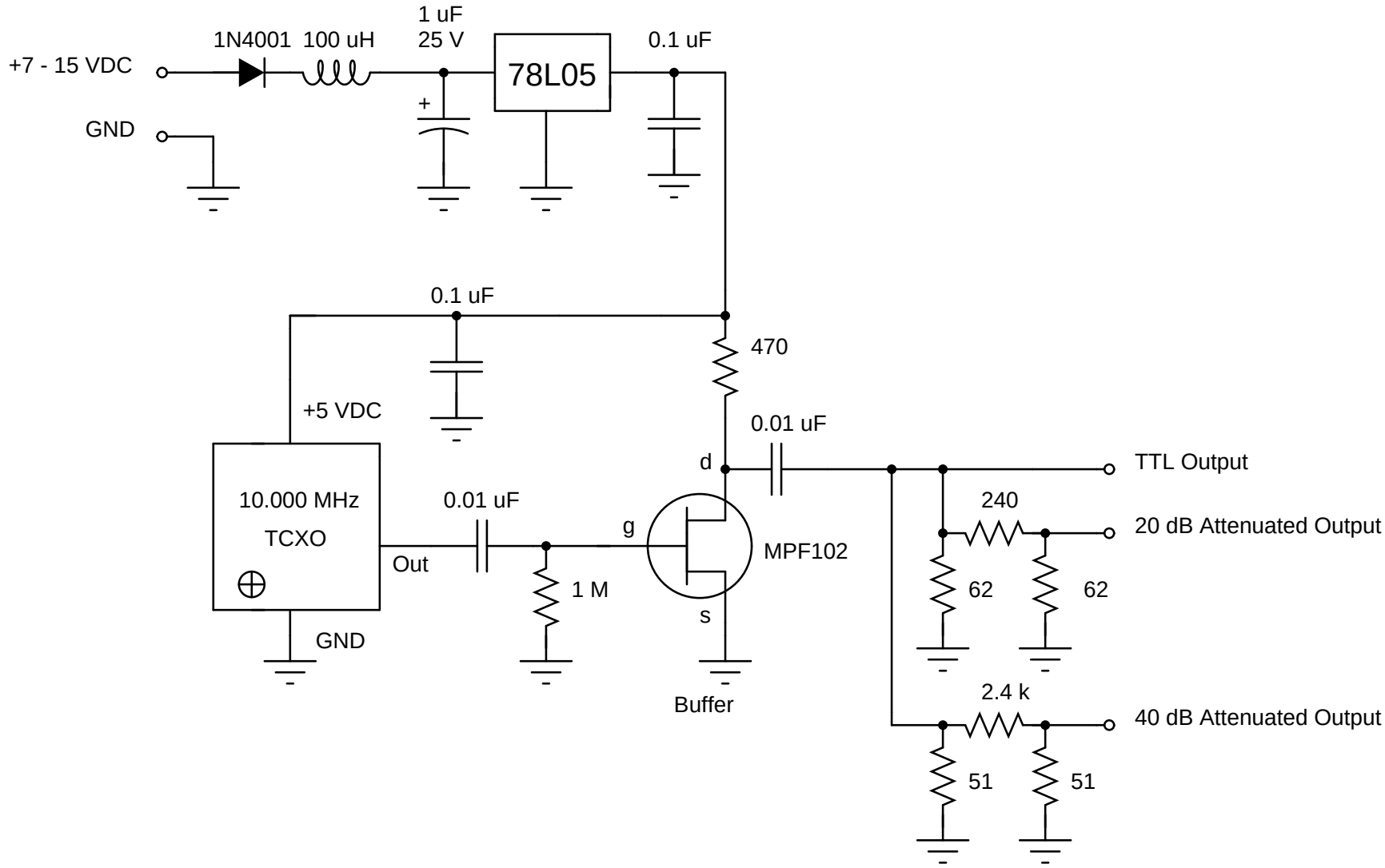10.000 MHz Precision Frequency Standard