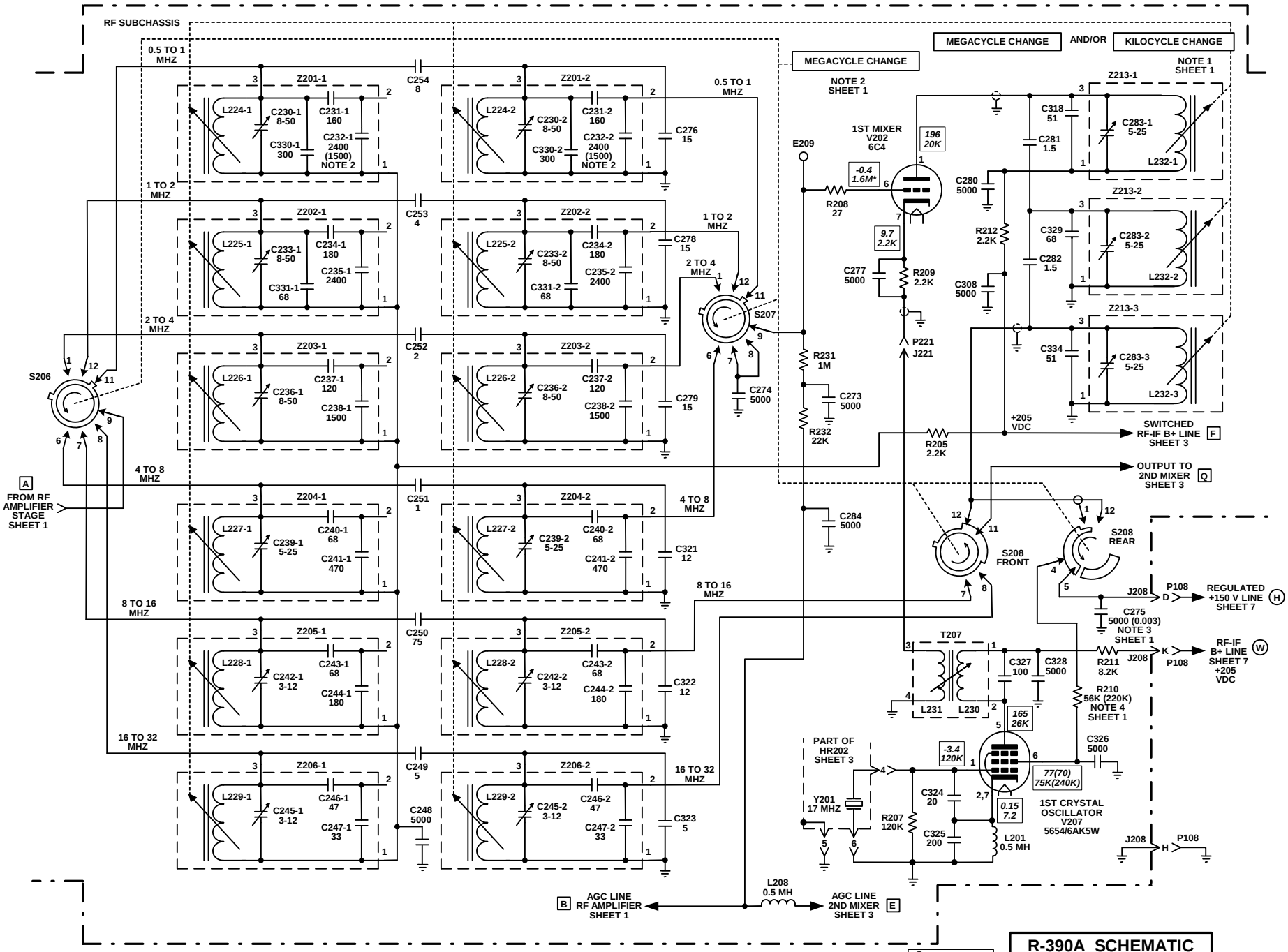

© DWG BY KH6GRT

Rev: 08/19/03

R-390A SCHEMATIC

SHEET 2 OF 7