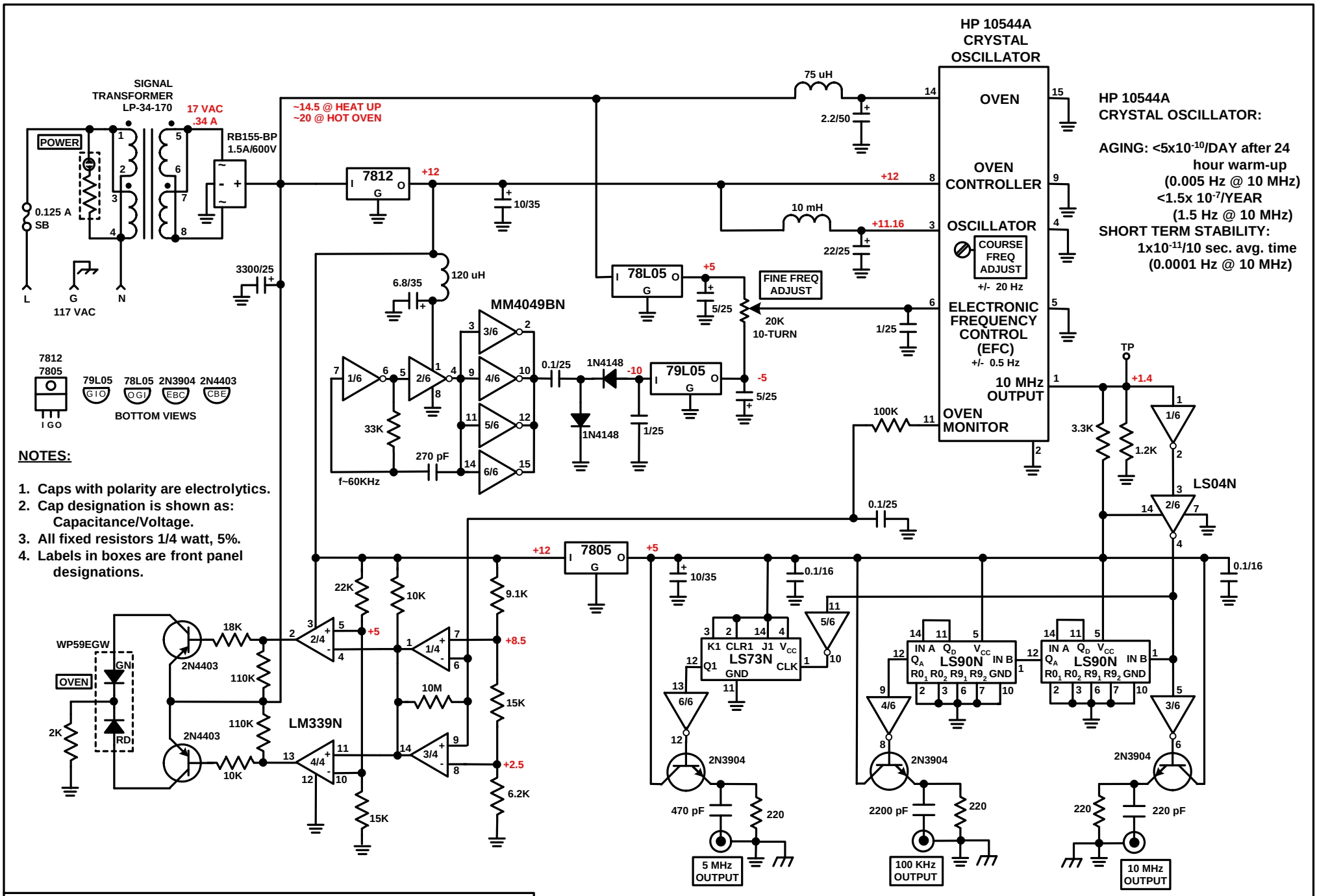

10 MHz PRECISION FREQUENCY OSCILLATOR

de KH6GRT

10/2007