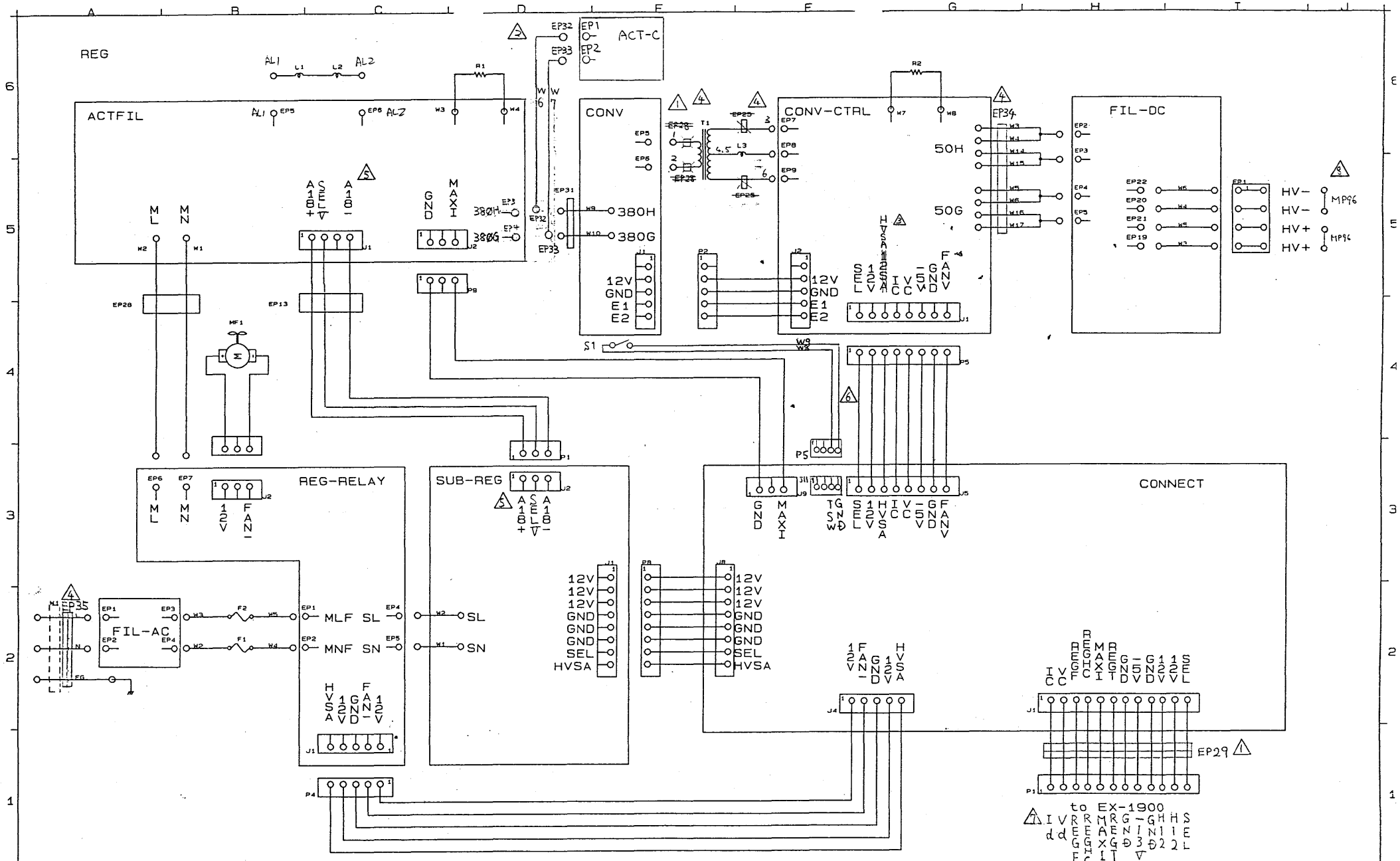

1	1997.9.12	MOD 3	(6F, 1I)		7	'97.11.25	MOD 23	(1H)		APPD.	CHKD.		DWN. BY:	DATE 1997. 7.14	MODEL PX-1981
2	1997.11.12	MOD 6	(6D)		8	'97.11.27	MOD 25	(5J)							
3	1997.11.12	MOD 7	(5G)		9	. .							T. Yonekawa	GENERAL INTER-CONNECTION	
4	1997.11.12	MOD 8	(6E, 6F, 6G, 2A)		10	. .									DWN. NO. -5C1
5	1997.11.12	MOD 9	(3D, 5C)		11	. .									
6	1997.11.12	MOD 10	(4E)		12	. .									

REVISIONS

ICOM