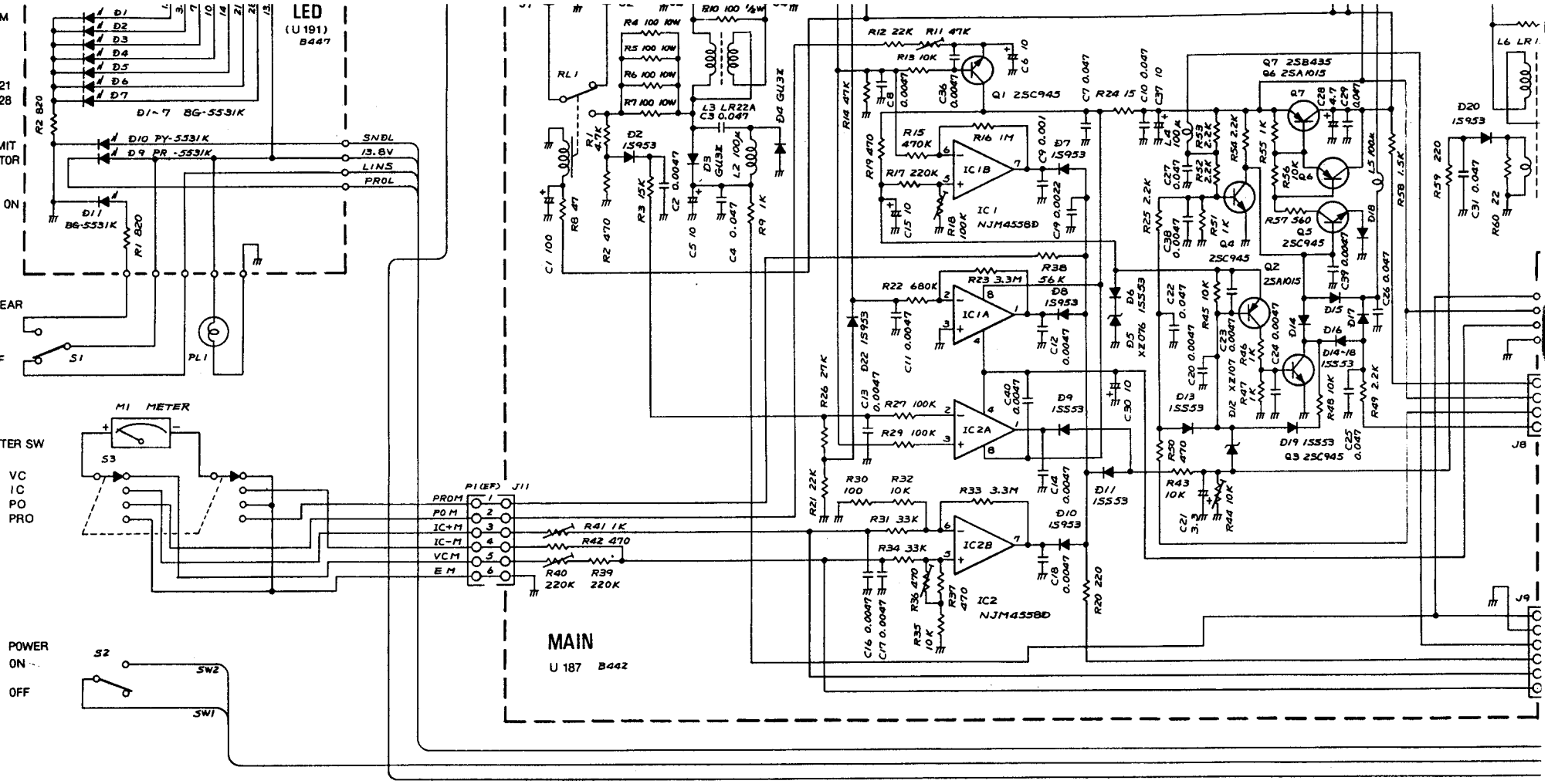
LED
(U 191)
B447
D1~7 BG-5531K
D10 PY-5531K
D9 PR-5531K
D11 BG-5531K
SNDL
13.8V
LINS
PROL
M1 METER
S3
VC
IC
PO
PRO
P1(EF) J11
PROM
PO M
IC+M
IC-M
VCM
E M
R41 1K
R42 470
R40 220K
R39 220K
S2
SW2
SW1
POWER
ON
OFF
MAIN
U 187 B442
IC1B
IC1
NJM4558D
IC1A
IC2A
IC2B
IC2
NJM4558D
Q1 2SC945
Q2 2SA1015
Q3 2SC945
Q4 2SC945
Q5 2SC945
Q6
Q7 2SB435
Q8 2SA1015
J8
J9
L6 LR1
D20 1S953