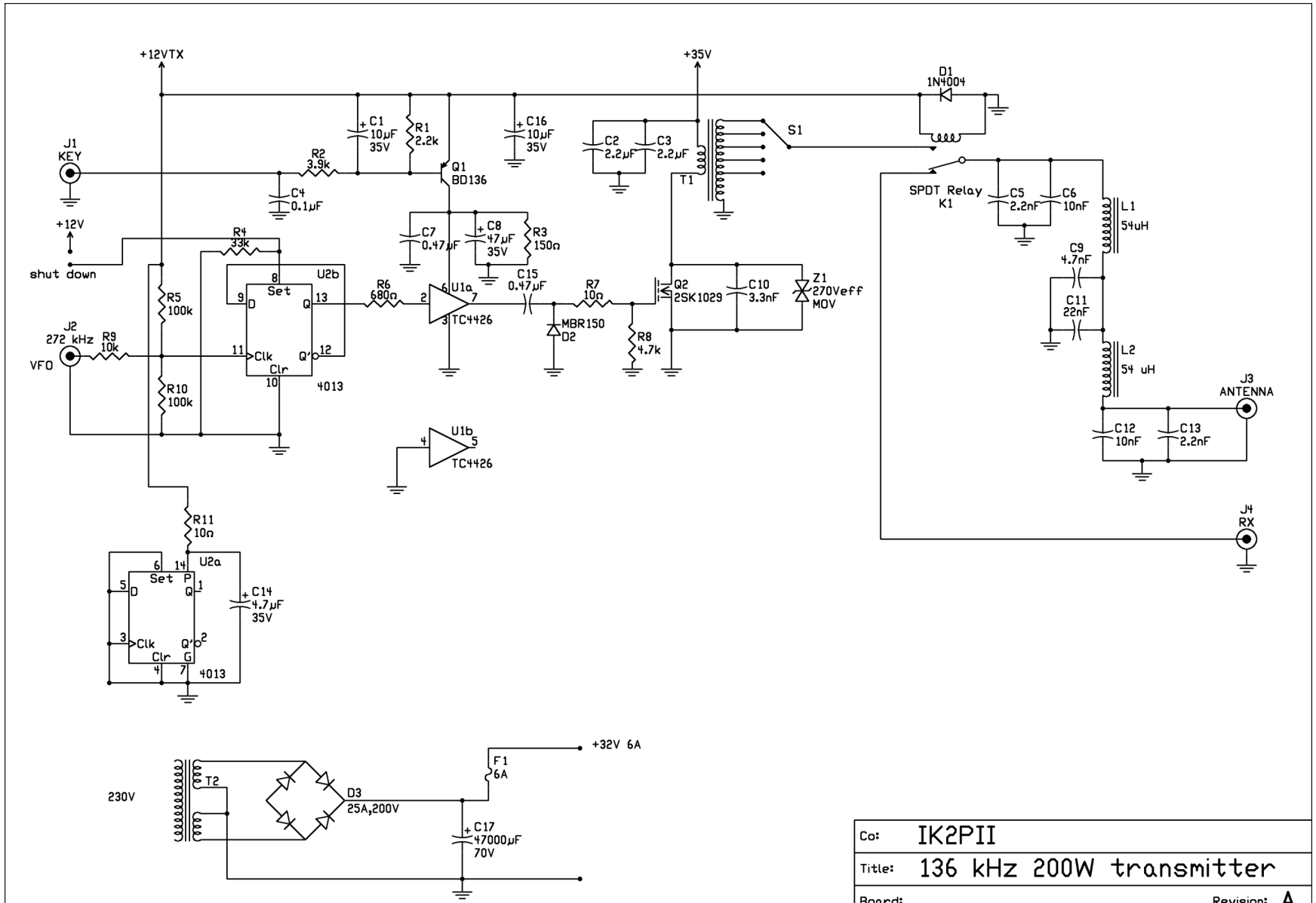

Co:	IK2PII		
Title:	136 kHz 200W transmitter		
Board:		Revision:	A
Author:	Claudio Pozzi	Size:	A
Date:	MAY 15 2001	Sheet	1 of 1