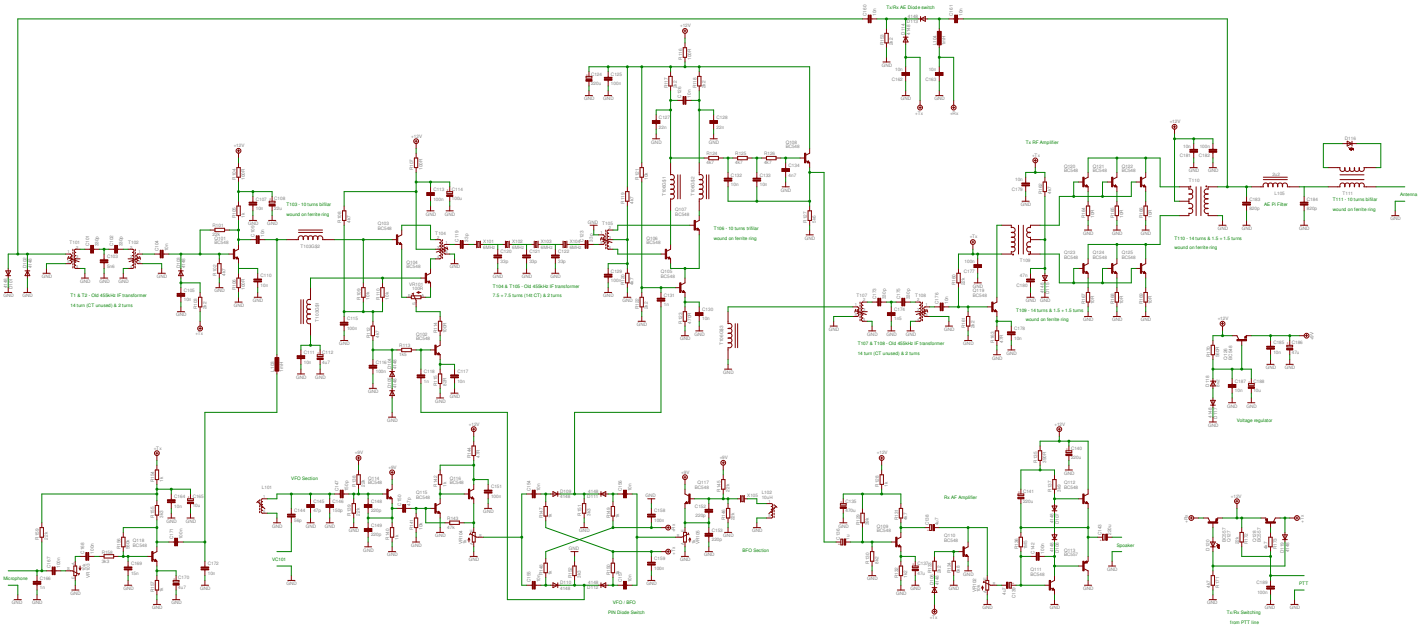
Tx/Rx AC Diode switch
Tx RF Amplifier
T1 & T2 - Old 455kHz IF transformer
14 turn (CT unused) & 2 turns
T103 - 10 turns bifilar
wound on ferrite ring
T103/S2
T104 & T105 - Old 455kHz IF transformer
7.5 + 7.5 turns (1/6 CT) & 2 turns
T106 - 10 turns bifilar
wound on ferrite ring
T107 & T108 - Old 455kHz IF transformer
14 turn (CT unused) & 2 turns
T109 - 14 turns & 1.5 + 1.5 turns
wound on ferrite ring
T110 - 14 turns & 1.5 + 1.5 turns
wound on ferrite ring
AC Pi Filter
T111 - 10 turns bifilar
wound on ferrite ring
Antenna
Voltage regulator
VFO Section
VC101
Microphone
VFO / BFO
PIN Diode Switch
BFO Section
Rx AF Amplifier
Speaker
Tx/Rx Switching
from PTT line
PTT