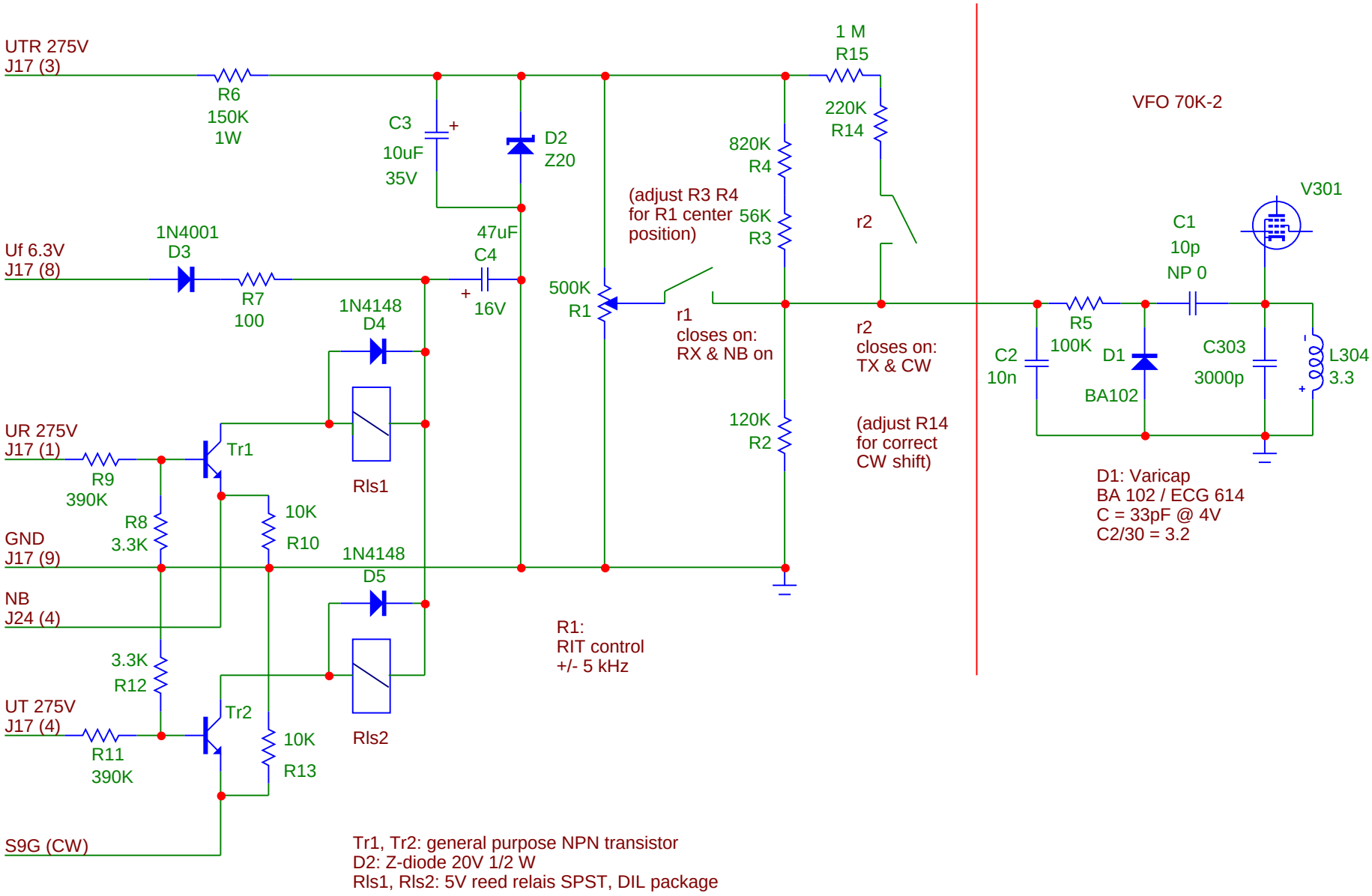

RIT + CW shift for Collins KWM-2

designed by Ernst F. Schroeder DJ7HS
(c) 1998
Page 1 of 1

PDF created with FinePrint pdfFactory trial version http://www.fineprint.com