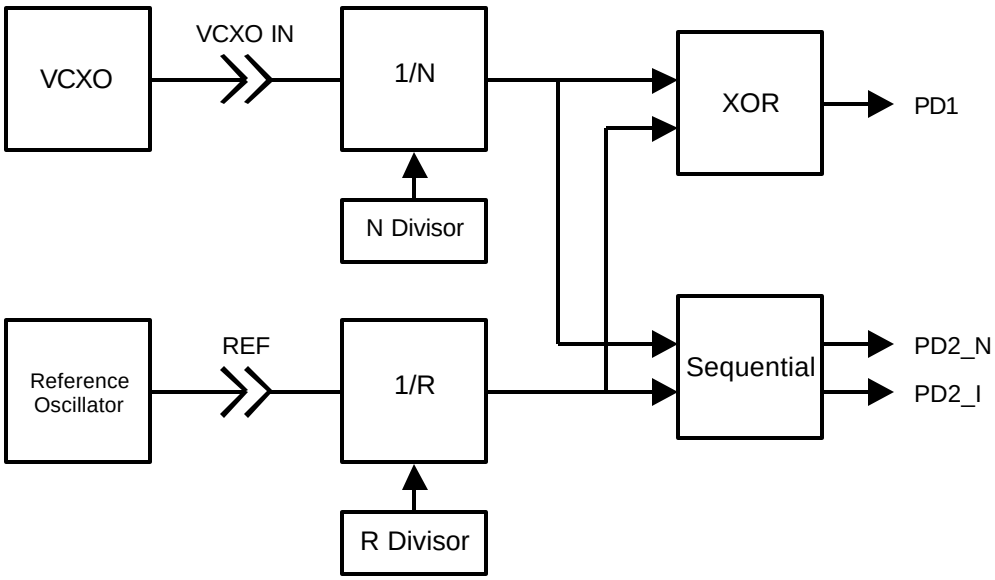
VCXO
VCXO IN
1/N
N Divisor
XOR
PD1
Reference Oscillator
REF
1/R
R Divisor
Sequential
PD2_N
PD2_I

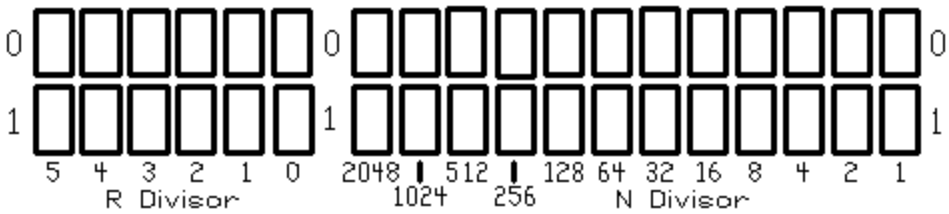
0
1
5 4 3 2 1 0
R Divisor
0
1
2048 1024 512 256 128 64 32 16 8 4 2 1
N Divisor
0
1

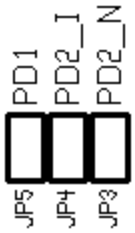
PD1
PD2_I
PD2_N
JP5
JP4
JP3

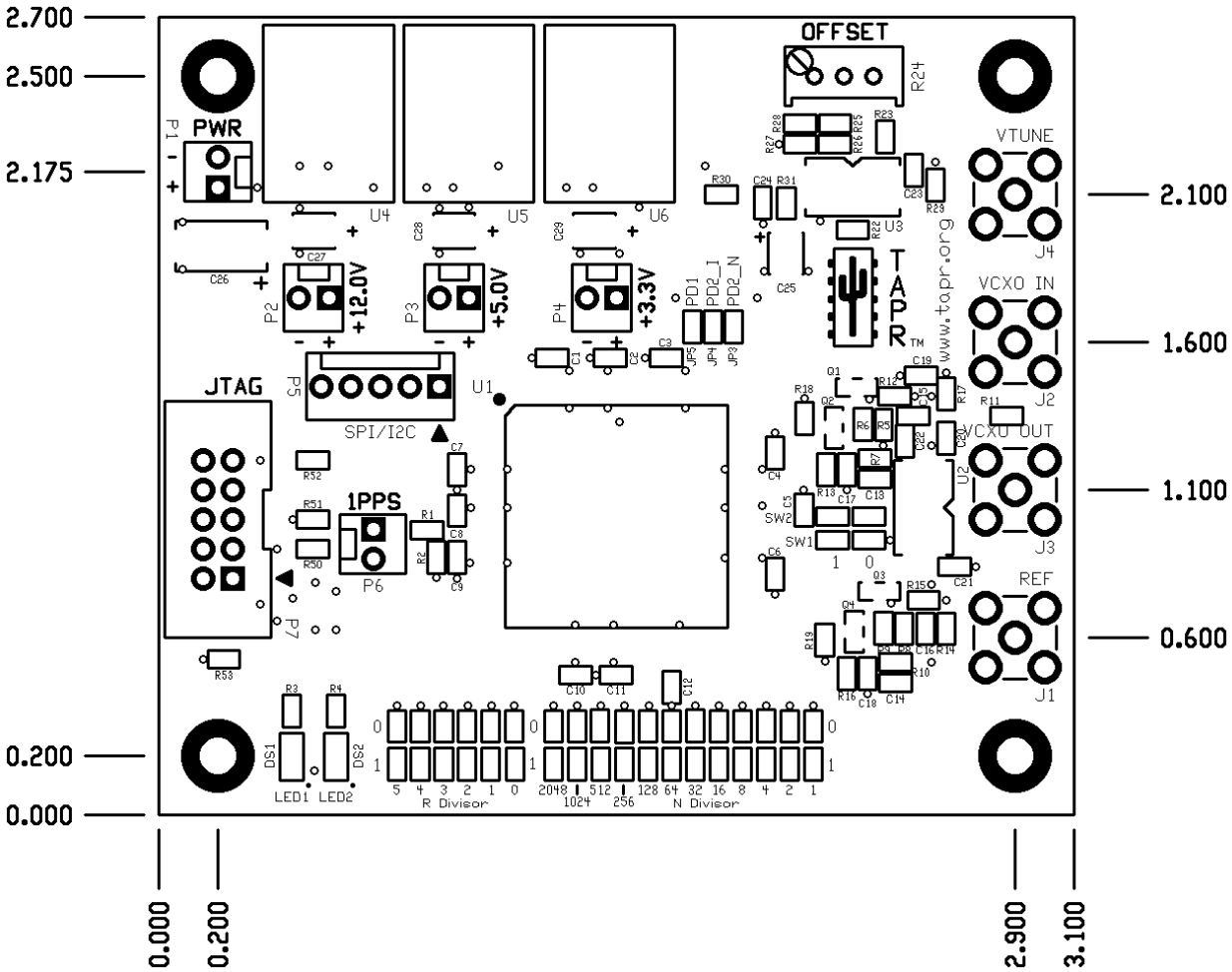

2.700
2.500
2.175
0.200
0.000
2.100
1.600
1.100
0.600
0.000
0.200
2.900
3.100
OFFSET
PWR
VTUNE
VCXO IN
VCXO OUT
REF
JTAG
1PPS
SPI/I2C
+12.0V
+5.0V
+3.3V
TAPR
www.tapr.org
R Divisor
N Divisor
LED1
LED2

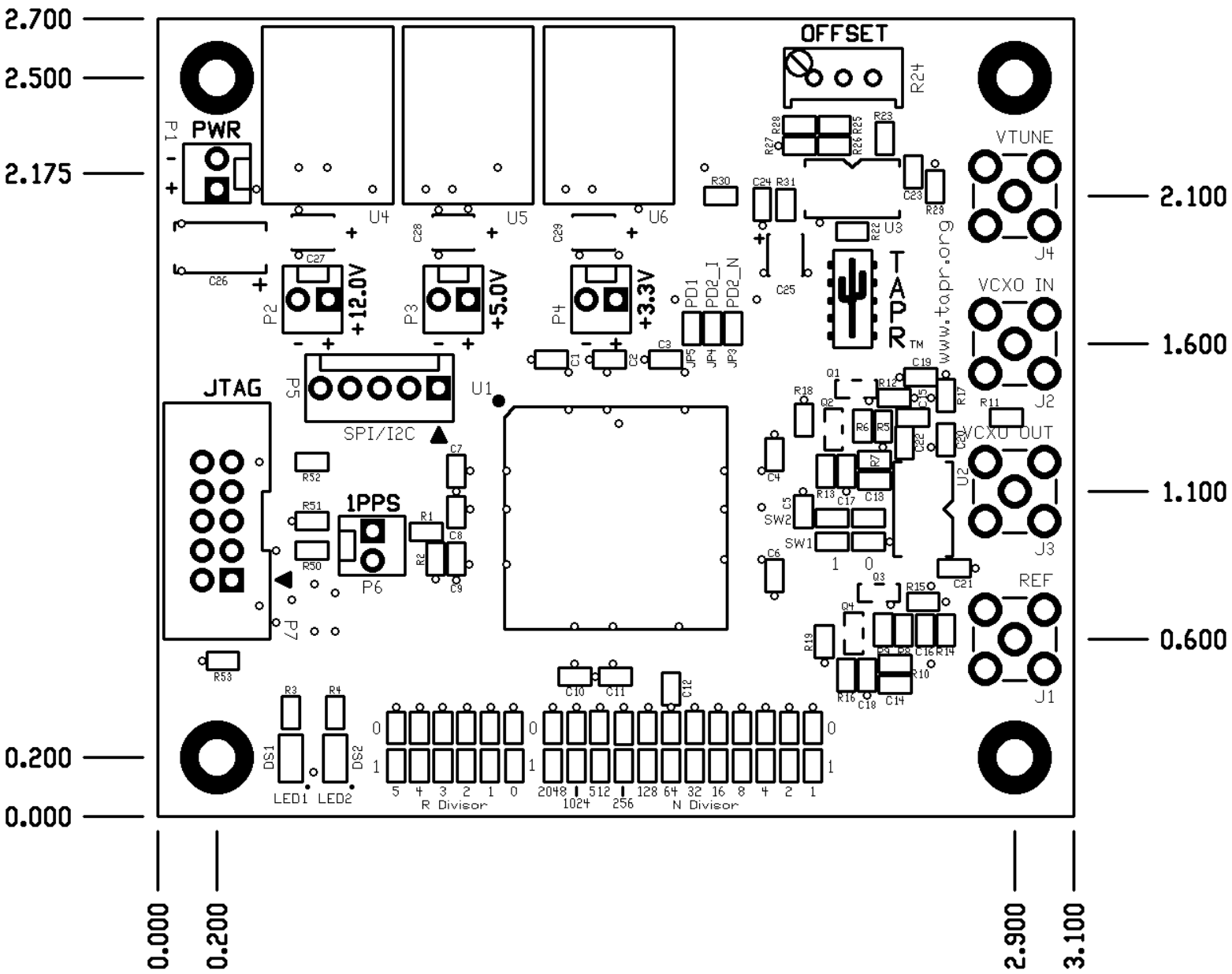

2.700
2.500
2.175
0.200
0.000
2.100
1.600
1.100
0.600
0.000
0.200
2.900
3.100
PWR
P1
U4
U5
U6
OFFSET
R24
VTUNE
J4
VCXO IN
J2
VCXO OUT
J3
REF
J1
U3
TAPR
www.tapr.org
P2
+12.0V
P3
+5.0V
P4
+3.3V
PD1
PD2_I
PD2_N
JTAG
P5
SPI/I2C
U1
1PPS
P6
P7
U2
SW1
SW2
LED1
LED2
DS1
DS2
R Divisor
N Divisor